Michigan Department of Agriculture and Rural Development

Fixed Food Establishment
Plan Review Manual

Food & Dairy Division
Michigan Department of Agriculture
and Rural Development
P.O. Box 30017
Lansing, MI 48909
(800) 292-3939

Table of Contents

		Page#
Introduction	Who must submit plans	3
Suggested Changes	Form	5
Plan Submittal	Documents Required	6
Plan Review Process	Flow Chart	8
Definitions	Definitions (Defined words are *italicized* in the text)	9
Part 1	Menu, Consumer Advisory, & Food Flow	12
Part 2	Handwashing	19
Part 3	Cold Holding, Cooling, Cooking, Reheating, Hot Holding	21
Part 4	Facilities to Protect Food	32
Part 5	Water Supply, *Sewage* Disposal & Grease Traps	35
Part 6	Food *Equipment* & Installation	36
Part 7	Dry Storage	40
Part 8	Sinks & *Warewashing* Facilities	42
Part 9	Hot Water Supply Requirements	47
Part 10	Finish Schedule/ Floors, Walls & Ceilings	52
Part 11	Toilet Facilities	54
Part 12	Plumbing & Cross-Connection Control	55
Part 13	Insect & Rodent Control	65
Part 14	Lighting	67
Part 15	Ventilation	67
Part 16	Dressing & Locker Rooms	70
Part 17	Garbage & *Refuse* Storage	71
Part 18	Open Dining, Exposed Food Preparation Areas & Outdoor Cooking Operations	71
Part 19	Non-Smoking Area and Anti-Choking Poster Requirements	75
References		76
Acknowledgements		77

Introduction

This manual is designed to assist in achieving greater uniformity in the plan review process by providing technical assistance for design professionals, owners and others in the preparation of food service plans and **completion of the plan review worksheet.** Manual section references are indicated throughout the worksheet. Individuals who have questions during the plan review process should call the local health department (LHD) or Michigan Department of Agriculture and Rural Development (MDARD), depending on who will conduct the plan review. Agency contact information:
MDARD: https://www.michigan.gov/mdard/0,4610,7-125-3099---C,00.html
LHD: https://www.michigan.gov/mdhhs/0,5885,7-339--96747--,00.html

Plan review of *food service establishments*, retail food stores, and all other food operations, is a high priority for the Michigan Department of Agriculture and Rural Development and Michigan's local health departments.

A good review of plans helps avoid future problems. By listing and locating *equipment* on floor plans and diagramming specifications for electrical, mechanical and *plumbing systems*, potential problems can be spotted while still on paper and modifications made **before** costly purchases, installation and construction.

Food establishment plan review is recognized as an important food program component that allows:

- Regulatory agencies to ensure that *food establishments* are built or renovated according to current regulations or rules;
- Industry to establish an organized and efficient flow of food; and
- Regulatory agencies to eliminate code violations prior to construction.

Who Must Submit Plans?

When plans are required, these plans must be *approved* prior to construction or remodeling! The regulatory agency will review the plans and specifications as soon as practical to determine their completeness and adequacy. The regulatory agency has up to 30 business days to review and approve **complete** plans and specifications. Submission of incomplete plans and specifications will delay the plan review process and the construction of your *food establishment*. If a submission of complete plans and specifications is not reviewed within 30 business days of receipt by the regulatory agency, the plans and specifications will be considered complete and adequate, however, the regulatory agency still has the authority to require changes to the built *food establishment*. Plan review fees vary among local health departments. The following establishments are required to submit plans for review and approval:

- *Food service establishment* (Local Health Departments - fees vary).
- Extended retail *food establishment* (MDARD - $197).
- Special transitory food unit (local health departments or MDARD - fees vary).*
- Mobile *food establishment* (local health departments or MDARD - fees vary).*
- Other MDARD-licensed retail establishments are encouraged to avail themselves of MDARD for plan review services.

**STFU/Mobile Food Establishment Plan Review Manual can be found at:*
https://www.michigan.gov/mdard/0,4610,7-125-50772_50775_51203---,00.html

Food Establishment Plan Submission Instructions

Once the plans have been *approved* and construction completed according to the *approved* plans, an application for a *food establishment* license must also be submitted to the appropriate regulatory agency at least thirty days before a *food establishment* plans to open. An inspection must then be conducted by the regulating agency before a license can be issued.

The Food Law and the Michigan Modified FDA 2009 Food Code, which is adopted by reference and is a part of the Food Law, is used as a reference in completing this guide. To view the food code, food law and other fact sheets go to: http://www.michigan.gov/mdard/0,4610,7-125-50772_45851_61711---,00.html You can call 800-292-3939 to request free single copies.

Suggestion Sheet
Food Establishment Plan Review Manual

Suggestions for changes to this plan review manual are welcomed from all users (e.g., food service operators, architects, engineers and regulators, etc.). Revisions to documents are made periodically as needed. Thank you for taking the time to submit your ideas.

Name: _____ Phone: _____

Fax: _____ E-mail: _____

Address: _____

City, State, Zip: _____

Submit suggested changes to:
Plan Review Specialist
Food Service Program
Food & Dairy Division
Michigan Department of Agriculture and Rural Development
PO Box 30017
Lansing, MI. 48909

E-mail: GarvinA1@michigan.gov

For suggested changes, please list section specific location in document. You may list your suggestions below or attach separate sheets. Please be specific and clear.

_____

_____

_____

_____

_____

_____

_____

_____

_____

_____

_____

Plan Review Submittal Instructions

Congratulations! You are proposing to build a fixed food establishment in Michigan. The regulatory agency responsible for conducting the plan review is dependent upon the food establishment type.

- Submit your plan review package to the Local Health Department (LHD) if your fixed food establishment is predominately going to be a **food service establishment**. This is a restaurant, coffee shop, cafeteria, short order cafe, luncheonette, grill, tearoom, sandwich shop, soda fountain, tavern, bar, cocktail lounge, nightclub, drive-in, industrial feeding establishment, private organization serving the public, rental hall, catering kitchen, delicatessen, theater, commissary, food concession, or similar place in which food or drink is prepared for direct consumption through service on the premises or elsewhere, and any other eating or drinking establishment or operation where food is served or provided for the public.
- Submit your plan review package to the Michigan Department of Agriculture and Rural Development (MDARD) if food establishment is predominately going to retail food (e.g. grocery store).

All the following items should be completed and compiled into a single package or the plan review may be delayed as additional material is requested by the regulatory authority. Documents listed below in italics can be found at https://www.michigan.gov/mdard/0,4610,7-125-50772_50775_51203---,00.html or contact the LHD for copies.

1. **Completed *Plan Review Application* and applicable plan review fees**
   - Food service establishment plan review that is conducted by LHD is mandatory. LHD plan review fees vary by jurisdiction. Contact the LHD who will be conducting the plan review for applicable fees.
   - MDARD plan review fee is $197.00. Mandatory plan review through MDARD is dependent upon the operation of the proposed retail food establishment. If the retail food establishment will have a deli section with seating and/or has a defined independent food service section, then plan review is mandatory. Indicators to consider if the food service section is independent include:
     - A menu that includes food items for immediate consumption.
     - A food service counter independent from a deli service counter.
     - Made to order foods in an area operating independently from a deli.
     - Assembling of time/temperature controlled for safety foods for direct consumption.
     - Carry Out.
     - A food service area operating independently from the deli operation.

     The listed indicators do not stand alone when determining when a plan review is mandatory. These indicators are used to define a food service area and show independent operation from a deli area. Both factors must be established for mandatory plan review. Voluntary plan reviews are an option for retail food establishments that are not considered mandatory and do not have a cost associated with them. MDARD encourages all operators to submit remodeling or construction plans for review. For questions regarding if your proposed operation will be a mandatory or voluntary plan review, please call 1-800-292-3939.

2. **Completed Plan Review Worksheet**
   - For fixed establishments, complete the *Fixed Facility Worksheet.*

3. Complete Menu

- For facilities that do not have a formal/set menu (e.g. school with a rotating menu), a list of food and drink offered, or representative sample menu is acceptable.

4. Standard Operating Procedures (SOPs)

- SOPs appropriate to the operation are required prior to opening.
- Guidance on SOPs for fixed establishments can be found in *Fixed Food Establishment SOP Manual* while SOPs for STFUs/mobile food establishments can be done within *STFU-Mobile SOP Worksheet*.

5. Certified Manager Documentation

- Most food establishments are required to employ at least one (1) full time certified manager employee who is certified under the American National Standards Institute (ANSI) accredited certification program (Food Law 2000, as amended, §289.2129). Documentation verifying this requirement needs to be provided prior to opening.

6. One Complete Set of Scaled Plans (1/4" per foot is a normal, easy to read scale) that show:

- Proposed equipment layout plan with all items accurately identified.
- Mechanical plan (e.g. cooking ventilation systems: including hood, duct and exhaust fans).
- Plumbing plan (e.g. handsinks, food preparation sink, warewashing sinks, dishmachines, water heater, hot and cold water lines, sewer drains, grease traps, floor drains/sinks, fresh water and waste water holding tanks for traveling units).
- Lighting plan, indicating light fixtures and type of shielding where applicable.
- Site Plan (e.g. details outside garbage storage and containers, exterior storage areas, on-site water well and sewage disposal)

7. Equipment Specifications

- Include manufacturer's specifications "cut" sheet for each piece of equipment. Minimum information needed includes the following:
    - Type, manufacturer, model number, performance capacity, dimensions.
    - How equipment will be installed (e.g. on legs or wheels, fixed or flexible utility connections)
    - Indicate if equipment is new or used and if it is certified or classified for sanitation by an American National Standards Institute (ANSI)-accredited certification program (e.g. NSF, ETL, UL, etc.).
    - Sanitation Standard Operating Procedures (SSOPs): Include any available cleaning and maintenance instructions for food processing, cutting, grinding equipment.

FOOD ESTABLISHMENT PLAN REVIEW PROCESS

1. New Food Establishment/Remodeling/Conversion Proposed. **Note**: Construction may not begin until approval is granted.
2. Operator assembles required documentation, completes the application forms and other required items – submits the materials along with payment to appropriate regulatory authority.
3. Review conducted by regulatory authority. **Note**: If the facility is serviced by on-site water supply or sewage disposal systems additional approvals will be necessary prior to food establishment plan approval.
4. If applicable, regulatory authority requests additional information regarding missing materials or information provided that does not meet requirements.
5. Plans are approved and regulatory authority sends a plan review approval letter.
6. **CONTRUCTION BEGINS***
7. Approved plans kept on site during construction. If plans are changed after approval, the changes must be submitted to regulatory authority in writting and approved again before proceeding with construction.
8. Applicant applies for food license 30 days prior to intended opening date.
9. Complete and submit an air balance test report plus local mechanical department's approval of ventilation system as well as approval from any other applicable departments (e.g. plumbing, building, etc.) if requested by regulatory authority.
10. Applicant requests an appointment for a pre-opening inspection, once all construction is complete, as required by the regulatory authority.
11. Pre-opening inspection conducted and approval of food licese and operation given by regulatory authority if establishment is compliant with Michigan Food Law and Michigan Modified Food Code. SOPs must be submitted and reviewed prior to opening.

*Regulatory agency has authority to issue a stop work order when construction begins before plans are approved.

Definitions

Defined words are in italics in the text of this document

Acceptable Food *Equipment* means food *equipment* that is deemed to be in conformance with Food Code provisions such as *equipment* that is certified or classified for sanitation by an American National Standards Institute (ANSI)-accredited certification program. Such *equipment* is deemed to comply with Parts 4-1 and 4-2 of the Food Code.

The term “certified” is used when an item of food *equipment* has been evaluated against an organization’s own standard. The term “classified” is used when one organization evaluates an item of food *equipment* against a standard developed by another organization.

Approved means acceptable to the *regulatory authority* based on a determination of conformity with principles, practices, and generally recognized standards that protect public health.

Easily Cleanable means:

1. A characteristic of a surface that:
    a. Allows effective removal of soil by normal cleaning methods;
    b. Is dependent on the material, design, construction, and installation of the surface; and
    c. Varies with the likelihood of the surface's role in introducing pathogenic or toxigenic agents or other contaminants into food based on the surface's *approved* placement, purpose, and use.
2. "*Easily cleanable*" includes a tiered application of the criteria that qualify the surface as *easily cleanable* as specified in item 1 of this definition to different situations in which varying degrees of cleanability are required such as:
    a. The appropriateness of stainless steel for a food preparation surface as opposed to the lack of need for stainless steel to be used for floors or for tables used for consumer dining; or
    b. The need for a different degree of cleanability for a utilitarian attachment or accessory in the kitchen as opposed to a decorative attachment or accessory in the consumer dining area.

Equipment means an article that is used in the operation of a *food establishment* such as a freezer, grinder, hood, ice maker, meat block, mixer, oven, reach-in refrigerator, scale, sink, slicer, stove, table, temperature measuring device for ambient air, vending machine, or *warewashing* machine.
"*Equipment*" does not include items used for handling or storing large quantities of packaged foods that are received from a supplier in a cased or overwrapped lot, such as hand trucks, forklifts, dollies, pallets, racks, and skids.

Food Establishment means an operation where food is processed, packed, canned, preserved, frozen, fabricated, stored, prepared, served, sold or offered for sale. *Food establishment* includes, but is not limited to, a *food processor*, a food warehouse, a *food service establishment*, and a retail grocery. *Food establishment* does not include any of the following:

1. A charitable, religious, fraternal or other non-profit organization operating a home-prepared baked goods sale or serving only home-prepared food in connection with its meetings or as part of a fund-raising event.
2. An inpatient food operation located in a health facility or agency subject to licensure under article 17 the public health code, MCL 333.20101 to 333.22260.

3. A food operation located in a prison, jail, state mental institute, boarding house, fraternity or sorority house, convent or other facility where the facility is the primary residence for the occupants and the food operation is limited to serving meals to the occupants as part of their living arrangement.

Food Processor means a *food establishment* that processes, manufactures, wholesales, packages, labels, or stores food. *Food processor* does not include a maple syrup producer. Processing is an act, such as canning, freezing, dehydrating, drying, distilling, extracting, preserving, grinding, crushing, milling, washing, trimming, packing, or otherwise preserving or changing the form of a food.

Food Service Establishment means a fixed or mobile restaurant, coffee shop, cafeteria, short order cafe, luncheonette, grill, tearoom, sandwich shop, soda fountain, tavern, bar, cocktail lounge, nightclub, drive-in, industrial feeding establishment, private organization serving the public, rental hall, catering kitchen, delicatessen, theater, commissary, or similar place in which food or drink is prepared for direct consumption through service on the *premises* or elsewhere, and any other eating or drinking establishment or operation where food is served or provided to the public. *Food service establishment* does not include any of the following:

1. A motel that serves continental breakfasts only.
2. A bed and breakfast that has 10 or fewer sleeping rooms for rent.
3. A bed and breakfast that has more than 10 sleeping rooms for rent, if the bed and breakfast serves continental breakfasts only.
4. A child care organization regulated under 1973 PA 116, MCL 722.111 to 722.128, unless the establishment is carrying out an operation considered by the director to be a food service establishment.

Physical Facilities mean the structure and interior surfaces of a *food establishment* including accessories such as soap and towel dispensers and attachments such as light fixtures and heating or air conditioning system vents.

Plumbing Fixture means a receptacle or device that:

1. Is permanently or temporarily connected to the water distribution system of the *premises* and demands a supply of water from the system; or
2. Discharges used water, waste materials, or *sewage* directly or indirectly to the drainage system of the *premises*.

Plumbing System means the water supply and distribution pipes; *plumbing fixtures* and traps; soil, waste, and vent pipes; sanitary and storm sewers and building drains, including their respective connections, devices, and appurtenances within the *premises*; and water-treating *equipment*.

Premises means:

1. The physical facility, its contents, and the contiguous land or property under the control of the permit holder.
2. The physical facility, its contents, and the land or property if its facilities and contents are under the control of the permit holder and may impact *food establishment* personnel, facilities, or operations, if a *food establishment* is only one component of a larger operation such as a health care facility, hotel, motel, school, recreational camp, or prison.

Ready-to-eat Food means foods that are edible without washing, cooking or additional

preparation. This includes, but is not limited to, raw animal foods that have been cooked; raw fruit and vegetables that have been washed, have had rinds, peels, husks or shells removed, and/or have been cooked for hot holding; all time/temperature control for safety foods that have been cooked and cooled; and baked goods. For further clarification of definition see Michigan Modified Food Code

Refuse means solid waste not carried by water through the *sewage* system.

Regulatory Authority means the local, state, or federal enforcement body or authorized representative having jurisdiction over the *food establishment*.

Safe Material means:

1. An article manufactured from or composed of materials that may not reasonably be expected to result, directly or indirectly, in their becoming a component or otherwise affecting the characteristics of any food;
2. An additive that is used as specified in § 409 of the Federal Food, Drug, and Cosmetic Act; or
3. Other materials that are not additives and that are used in conformity with applicable regulations of the Food and Drug Administration.

Sealed means free of cracks or other openings that allow the entry or passage of moisture.

Smooth means:

1. A food-contact surface having a surface free of pits and inclusions with a cleanability equal to or exceeding that of (100 grit) number 3 stainless steel;
2. A nonfood-contact surface of *equipment* having a surface equal to that of commercial grade hot-rolled steel free of visible scale; and
3. A floor, wall, or ceiling having an even or level surface with no roughness or projections that render it difficult to clean.

Sewage means liquid waste containing animal or vegetable matter in suspension or solution and may include liquids containing chemicals in solution.

Time/Temperature Control for Safety Food-*TCS* (formerly called Potentially Hazardous Food) means a food that requires time/temperature control for safety (*TCS*) to limit pathogenic microorganism growth or toxin formation. For complete definition, see Michigan Modified Food Code

1. ***TCS* food** includes:
    a. An animal food that is raw or heat-treated; a plant food that is heat-treated or consists of raw seed sprouts, cut melons, cut leafy greens, cut tomatoes or mixtures of cut tomatoes that are not modified in a way so that they are unable to support pathogenic growth or toxin formation or garlic-in-oil mixtures that are not modified in a way that results in mixtures that do not support pathogenic microorganism growth or toxin formation; and
    b. Except as specified in Subparagraph (2)(d) of this definition, a food that because of the interaction of its A_W and pH values is designated as Product Assessment Required (PA) in Table A or B of the Michigan Modified Food Code.

Warewashing means the cleaning and sanitizing of utensils and food-contact surface of equipment.

Part 1
Menu, Food Flow, HACCP, & Consumer Advisory

Worksheet Help			
Worksheet Question #		**Food Code & Food Law***	**Guidance**
1	Thawing	FC 3-501.13	1. Identify all *time/temperature control for safety foods(TCS) on the* menu that must be thawed. 2. List the foods in each thawing method to be used. **Note:** Thinner foods (<1" thick) may consist of sliced meats, individual hamburger patties, hot dogs, some seafood, etc., Thicker foods (>1" thick) may consist of roasts, a case of hamburger patties, chicken, frozen pasteurized eggs, etc.
2	Cooking Reheating	FC 3-401.11-14 FC 3-403.10-11	1. List the name of all cooking and reheating *equipment*. Include tabletop *equipment* such as rice cookers and microwaves. 2. Check whether each piece will be used for cooking and/or reheating, whether it is new or used, and whether it is listed by an ANSI accredited third party certification organization, such as the National Sanitation Foundation (NSF), Intertek (ETL), etc. These firms test *equipment* to determine if recognized sanitation and construction standards are met.
3	Hot & Cold Holding	FC 3-501.16	1. List the name of all hot and cold holding *equipment*. Examples include: steam tables, electric hot boxes, insulated hot/cold boxes, buffet units, refrigerators, etc. 2. Check whether each piece will be used for hot and/or cold holding, whether it is new or used, and whether it is listed by an ANSI accredited third party certification organization such as National Sanitation Foundation (NSF), Intertek (ETL), etc. 3. Note any *equipment* listed under question 2 that will also be used for hot or cold holding.
4	Ice	FC 3-202.16 FC 3-303.11-12	Describe in as much detail as possible how, when and where ice will be used to hold *TCS foods* cold. Use of ice off-site for catering can be answered under question 10.
5	Time as a Control	FC 3-501.19	Under specific and limited circumstances, time instead of temperature may be used to control bacterial growth in food that is *TCS*. A careful reading of the relevant food code section and discussion with the regulating authority is recommended before making a proposal. You must prepare a standard operating procedure for each food item where time as a control is proposed.
6	Cooling	FC 3-501.14-15	1. Identify foods from the menu that will be cooled: a. After cooking/heating b. After preparing from room temperature or pre-chilled ingredients (i.e. tuna salad) 2. Determine and list the cooling method(s) for each food.
7	Bare Hand Contact	FC 3-301.11	Bare hand contact with *ready-to-eat* foods is not permitted, unless a written alternative plan is developed and *approved* by the *regulatory authority* prior to usage. Check the methods you will use to avoid bare hand contact.
8	Washing Produce	FC 3-302.15	If produce is going to be washed, list which sinks will be used.

9	Date Marking	FC 3-501.17	Describe the date marking system you will be using for *ready-to-eat TCS* foods that are held longer than 24 hours.
10	Catering/Off-site service	Numerous	Describe any catering or off-site food service that will be occurring.
*FC =Michigan Modified 2009 Food Code. *FL = Food Law To view the food code, food law and other fact sheets go to: http://www.michigan.gov/mdard/0,4610,7-125-50772_45851_61711---,00.html or call 800-292-3939 to request single free copies.			

Menu and Food Flow

The menu review and the flow of food through the *food establishment* are integral parts of the plan review process. The menu or a listing of all the food and beverage items to be offered at the *food establishment* must be submitted as part of the plan review application to the *regulatory authority*.

As with the inspection process, the plan review process should focus on the food and its flow through receipt, storage, preparation and service. The source and quantity of food to be served should be reviewed along with the preparation and post-preparation operations. It is imperative to have knowledge of this information so that a proper assessment of the *physical facilities* can be made.

The food that flows through retail *food establishment* operations can be placed into the 3 following processes:

- **FOOD PROCESSES WITH NO COOK STEP**
  - **Receive – Store - Prepare – Hold – Serve**
    - (Other processes may occur, but there is **NO cooking step**)
  - Examples: Salads, deli meats, cheeses, sashimi, raw oysters

- **FOOD PREPARATION FOR SAME DAY SERVICE**
  - **Receive – Store - Prepare - Cook – Hold – Serve**
    - (Other processes may occur, including thawing)
  - Examples: Hamburgers, fried chicken, hot dogs

- **COMPLEX PROCESSES**
  - **Receive – Store - Prepare – Cook – Cool – Reheat – Hot Hold – Serve**
    - (Other processes may occur, but the key is repeated trips through the temperature danger zone 135°F - 41°F)
  - Examples: Refried beans, leftovers

Knowledge of how the food is intended to flow through the *food establishment* is very useful since the critical control points for each process remain the same regardless of the individual menu ingredients.

Special attention should be given to the review of complex food processes which involve:

- Multiple ingredients being assembled or mixed
- Time/Temperature Control for Safety Foods (*TCS*)
- Foods which will be prepared or held for several hours prior to service
- Foods requiring cooling and reheating
- Multiple step processing (passing through the temperature danger zone, 135˚F-41˚F,

more than once)

The process approach can be described as dividing the many flows in a *food establishment* into broad categories, analyzing the risks, and placing manager controls on each grouping of food processes. These groupings will also impact the facility design; food flow; and the numbers, types, function and placement of *equipment*.

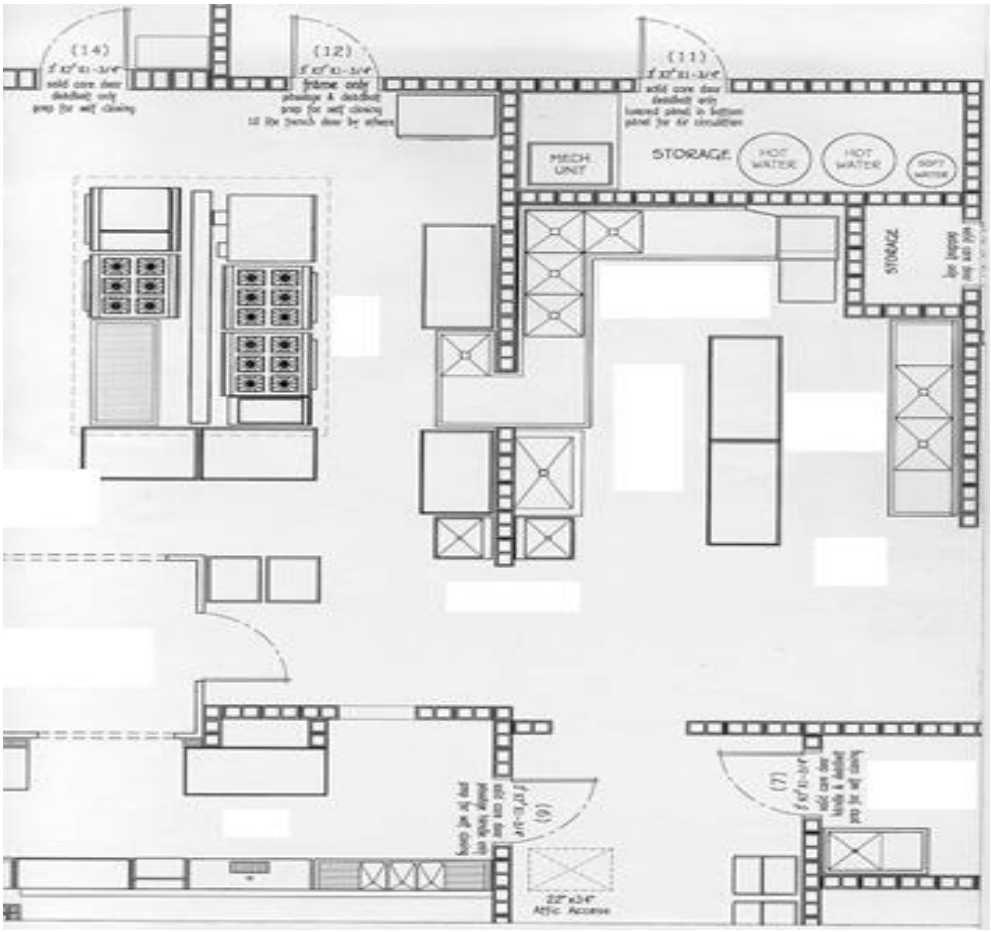

Layout, flow and menu (including food preparation processes) should be major considerations to help facilitate an operator's Active Managerial Control (AMC) of the risk factors for foodborne illness. Strategic layout and placing of facilities and *equipment* will separate different food preparation processes, a major step towards preventing contamination of food that may result from poor personal hygiene, contaminated *equipment* and improper holding temperatures. Adequate and convenient storage will also enhance operations.

The menu for a *food establishment* dictates the space and *equipment* requirements for the safe preparation and service of various food items. The menu will determine if the proposed receiving and delivery areas, storage area, preparation and handling areas, and thawing, cooking and reheating areas are available and adequate to handle the types and volumes of foods being prepared and served.

When reviewing the menu, it is important to evaluate the flow patterns for the preparation of the food to be sure that the layout of the facility provides an adequate separation of raw ingredients from *ready-to-eat* foods, and that the traffic patterns are not crossing paths with waste items and other sources of contamination. Cross contamination can be minimized when the flow of food is

considered during plan review.

With a proper understanding of the menu and flow, the plans for *food establishment* can be reviewed to help assure that the food items being considered can be protected during all aspects of the food operation.

The following page addresses some of the *equipment* needs for the *food establishment* based upon the food processes that would be conducted within that *food establishment*.

Food Process and Steps Required

	Receive	Store	Prepare	Cook	Cool	Reheat	Hold	Service
No Cook	X	X	X				X	X
Same Day Service	X	X	X	X			X	X
Complex Processes	X	X	X	X	X	X	X	X

Anticipated *Equipment* Needs	**Receive**	**Store**	**Prepare**	**Cook**	**Cool**	**Reheat**	**Hold**	**Service**
	Thermometer	Dry Storage	Preparation Table	Fryer	Preparation Sink	Fryers	Refrigerators	Cold Holding
		Refrigerated Storage	Cutting Boards	Oven	Ice Bath	Oven	Ice	Hot Holding
		Frozen Storage	Utensils	Broiler	Blast Chiller	Grills	Cold Hold	Utensils
		Thermometer	Handwash Sinks	Grill	Shallow Pans	Burners	Hot Hold	
			Preparation Sinks	Cook Top	Refrigerators	Griddle	Food Warmers	
			Refrigerators	Griddle	Chill Sticks	Other	Thermometer	
				Other	Thermometer	Handwash Sink	Handwash Sinks	
				Thermometer	Handwash Sinks			
				Handwash Sink	Preparation Table			
					Other			

Active Managerial Control (AMC)

To effectively reduce the occurrence of foodborne illness risk factors, operators of *food establishment*s must focus their efforts on achieving active managerial control. The term "active managerial control" is used to describe industry's responsibility for developing and implementing food safety management systems to prevent, eliminate, or reduce the occurrence of foodborne illness risk factors.

Elements of an effective food safety management system may include the following:

- Certified food protection managers who have shown a proficiency in required information by passing a test that is part of an accredited program.
- Standard operating procedures (SOPs) for performing critical operational steps in a food preparation process, such as cooling.
- Recipe cards that contain the specific steps for preparing a food item and the food safety critical limits, such as final cooking temperatures, that need to be monitored and verified.
- Purchase specifications.

HACCP

Hazard Analysis and Critical Control Points (HACCP) Plan is a written document that outlines the formal procedures for a particular food process. The Michigan Modified Food Code requires a HACCP Plan and variance for certain specialized food processes. These processes are outlined within Michigan Modified Food Code sections 3-502.11. Specialized food processes that require both a variance and HACCP Plan include:

- Smoking food as a method of food preservation rather than a method of flavor enhancement.
- Curing food.
- Using food additives or adding components as a means for:
    - Food preservation rather than as a method of flavor enhancement, or
    - To render a food so that is not time/temperature controlled for safety.
- Packaging time/temperature control for safety food using a reduced oxygen packaging (ROP) method (i.e. vacuum packing) except where the growth of and toxic formation by Clostridium botulinum and the growth of Listeria monocytogenes are controlled as specified under Michigan Modified Food Code 3-502.12.
- Operating a molluscan shellfish life-support system display tank used to store or display shellfish that are offered for consumption.
- Custom processing animals that are for personal use as food and not for sale or service in a *food establishment*.
- Sprouting seeds or beans.
- Preparing food by another method that is determined by the regulator authority to require a variance.

Proper design and construction of a *food establishment* during plan review are essential for success of any HACCP Plan that is intended to be put into place. A formal HACCP Plan evaluation is required and needs to be *approved* prior to conducting any of these specialized

food processes. For more information on variances and HACCP Plans contact your regulatory agency and visit: https://www.fda.gov/Food/GuidanceRegulation/HACCP/ucm2006810.htm

Consumer Advisories

For *food establishment*s serving undercooked or raw animal products, consumer advisories are required on whatever consumers read to make their order selections, such as menu, table tent, placard, chalkboard, or other written means. View a guidance document at: http://www.michigan.gov/documents/mda/MDA_FCConsAdvisMay08_245934_7.pdf or call your *regulatory authority* for assistance in developing your consumer advisory.

Part 2

Handwashing

Handwashing is a critical factor to prevent contamination of foods. Proper handwashing reduces the amount of pathogens that can be transmitted via cross contamination from raw foods to *ready-to-eat* foods. It is imperative to have adequate numbers and conveniently placed handwashing sinks to ensure employees are washing hands. It is important that handwashing be done only at properly equipped handwashing sinks to help ensure that employees effectively clean their hands and minimize contamination of food and food-contact surfaces.

A handwashing sink, hand drying device or disposable towels, hand cleanser and waste receptacle shall be located for convenient use by employees who work in food preparation, food dispensing, and *warewashing* areas.

Nothing must block the approach to a handwashing sink.

Handwashing sinks must be located in or immediately adjacent to toilet rooms.

Handwashing sinks shall be of sufficient number and conveniently located for use by all employees in food preparation, food dispensing, and *warewashing* areas.

Handwashing sinks shall be easily accessible and may not be used for purposes other than handwashing. Sinks used for food preparation, washing *equipment* or utensils, or service (mop) sinks shall not be used for handwashing.

Each handwashing sink shall be provided with hot and cold water tempered by means of a mixing valve or a combination faucet to provide water at a temperature of at least 100˚F. If used, self-closing, slow-closing or metering faucets shall be designed to provide a flow of water for at least 15 seconds without the need to reactivate the faucet.

Splash from use of a handwashing sink may not contaminate food, food-contact surfaces, clean *equipment* or utensils. A washable baffle or barrier may be needed if the handwashing sink is located next to a food preparation area, utensil or *equipment* storage, or food-contact surface and if the space between the handwashing sink and food, food preparation, food-contact surfaces, and clean utensils and *equipment* does not provide adequate protection.

Similarly, the location of soap and paper towel dispensers at handwashing sinks must be reviewed during plan review so that their use does not contaminate food, food-contact surfaces, utensils and *equipment*. In addition, the distance that employees would have to reach the faucet handles, soap and paper towels must be reviewed during plan review to assure that they will have proper access to the handwashing sinks and will not have to reach across dirty surfaces while washing their hands.

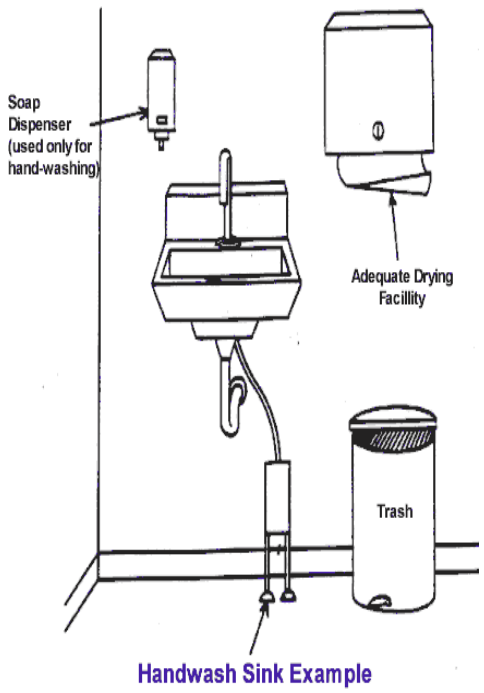

Handwash Sink Example

When locating handwashing sinks, the following <u>guidelines</u> can be used:

- **Provide a sink close to each employee workstation.**
- **Keep sinks within the employee's line of sight and guideline of within 20 feet of their workstation. It is up to the regulating authority's discretion regarding the distance, spacing, and location of handwashing sinks in relation to employee workstations.**
- **Keep a handsink near the flow of food.**
- **Make sinks easily available for those handling both raw and *ready-to-eat* foods.**
- **Provide a sink close to dishwashing areas.**
- **Splashguard protection may be needed on the sink if adjoining food, food preparation, food contact surfaces, and utensil washing area surfaces (drainboards) are within 18". Splashguards should not hinder access to the sink and should extend from the front of the sink to 12" above the rim of the sink and be *easily cleanable*.**

A sign or poster that notifies *food employees* to wash their hands shall be provided at all handwashing sinks used by *food employees* and shall be clearly visible to *food employees*.

Part 3

Cold holding, Cooling, Cooking, Reheating, Hot holding

Cold holding, cooling, cooking, reheating, and hot holding *equipment* shall comply with the requirements of the Michigan Modified Food Code. Food *equipment* that is certified by an American National Standards Institute (ANSI)-accredited certification body (e.g., NSF, UL, ETL) as meeting NSF/ANSI Standards for sanitation, will automatically be accepted as complying with the Food Code, provided *equipment* is in good condition and has not been altered or modified. *Equipment* that is not certified by an ANSI accredited certifier should be reviewed for meeting requirement of Subpart 4-1 and 4-2 of the Michigan Modified Food Code.

Cold Holding and Cooling *Equipment*

Refrigerators and freezers are required to maintain *TCS* foods at or below 41°F and 0°F (frozen) respectively. It is recommended that refrigerators ambient air temperature be maintained between 36°F and 38°F. All refrigeration units must have numerically scaled indicating thermometers accurate to ±3°F. Sufficient refrigeration and freezers shall be provided to support the intended menu. Consideration must be taken with the placement and installation of refrigeration units to allow for adequate ventilation. Air circulation within refrigeration and freezer units should not be obstructed and should allow for an even and consistent flow of cold air throughout the units.

Refrigeration and freezer storage involves five major areas:

1. Storage for short-term holding of perishable and *TCS* food.
2. Long-term storage (includes raw animal items and whole produce).
3. Storage space for quick chilling of foods.
4. Space for assembling and processing of *TCS* food.
5. Display storage for customer service.

If time/temperature control for safety foods are prepared a day or more in advance of service, a rapid cooling procedure capable of cooling *TCS* foods from 135°F to 41°F within 6 hours (135°F to 70°F within 2 hrs.) must be provided. The capacity of the rapid cooling facilities must be sufficient to accommodate the volume of food required to be cooled to 41°F within 6 hours. The location of the rapid cooling facilities (e.g., sinks for ice baths, freezer storage for ice wands, blast chillers) must be identified. Refrigerators and freezers at work stations for operations requiring preparation and handling of *TCS* foods should be considered. For example, it may be necessary to locate a freezer near the fryer where frozen products will be deep-fried. Refrigeration units, unless designed for such use, should not be located directly adjacent to cooking *equipment* or other high heat producing *equipment* which may adversely impact the cooling system's operation.

Walk-In Cooler/Freezer Units

Walk-in units should meet an ANSI accredited certification or equivalent, or be deemed acceptable by the *regulatory authority*. A walk-in beverage or beer cooler is not recommended for food storage. *Approved* flooring and integral cove bases need to be provided. All gaps, cracks, penetrations, seams, and plug holes shall be *sealed smooth* and flush with the surface material.

Exterior of Walk-in

Interior of Walk-in

Walk-in units should be installed when there is a need for long-term storage of perishable and time/temperature controlled for safety food or when cooling space is needed for prepared and cooked foods. These coolers should be located near delivery or receiving areas. *Easily cleanable* curtain strips are recommended at walk-in doors. This not only helps in maintaining the temperature of the walk-in but also leads to an energy cost savings.

Exterior walk-in unit locations shall be properly designed for exterior installation and consideration shall be given to varied environmental concerns. Exterior walk-in units should be designed with a roof, *approved* overhead waterproof protection, and walkways should be provided for the transportation of food items. Food needs to be adequately protected when being transported to and from exterior walk in units. It is recommended that exterior walk-ins be utilized for packaged/covered food with one-way transportation from the exterior unit to the interior of the facility. Exterior walk-in units shall be *approved* by the local building official and are evaluated and *approved* on a case-by-case basis by your regulating authority. It is recommended that the end of the walk-in unit drain line have a screen to protect from pest entry and be 6” from the ground to prevent blockage by snow.

If the walk-in floors will be water-flushed for cleaning or will receive the discharge of liquid waste or excessive meltwater, the floors should be sloped to drain. If the structure of the walk-in is integral with the building, properly installed floor drains may be installed inside the unit if pre-*approved* by the *regulatory authority*. Floor drains located within walk-in refrigerators or freezers require backflow prevention as described in Part 12 of this manual.

Each walk-in unit shall be equipped with lighting that provides 10 foot candles of light, 30 inches above the floor, throughout the unit when it is full of product. Centrally located lighting is recommended. Lights must be properly shielded or shatter resistant.

Condensate lines from walk-in units shall drain to *approved* floor drains through air gaps, unless otherwise *approved* by your regulating authority. Without prior approval floor sinks or floor drain sinks shall not be installed in walk-in units. All walk-in units shall be properly flashed off and *sealed* to the ceiling and side walls. Walk-in units are not to be confused with refrigerated food processing rooms. Refer to Refrigerated Processing Rooms later in this document.

Reach-in Refrigerators

These units are for storage of perishable and time/temperature controlled for safety foods. These units should be considered to meet the daily storage demands of the kitchen operation. They are to be conveniently located at points of food preparation and food assembly. These units are not to be considered for the quick chilling of cooked and prepared foods.

Reach-in Freezers

Freezers are for long-term storage. They are not designed to be used as quick-chill units. These units should be located near delivery and dry storage areas.

Blast Chillers/Rapid Chill Units

These units are recommended for use when handling large volumes of food that require quick chilling. A blast chiller is an efficient cooling mechanism for any amount of food to be chilled, and where refrigeration cooling space is limited.

Exterior of Blast Chiller

Interior of Blast Chiller

Refrigerated Worktables

These units are suggested when the menu includes assembling *TCS* foods. These units provide easy access of foods from the top of the unit. These units are not designed for long-term storage of food or cooling.

Refrigerated Processing Room

These areas (e.g. meat cutting rooms) should be considered when there is extensive handling of cold time/temperature controlled for safety foods. *Approved* handwashing sinks should be located in these areas.

Display Storage Refrigerators

These units are designed to display time/temperature controlled for safety food under refrigeration. Examples of these units are deli display, fresh fish, and meat and poultry cases.

Customer Service Display Units/ Cold Buffet Units

These units are designed for holding food under refrigeration for customer access. They are designed for short-term display and are not designed for the cooling of food. Beverage display coolers are not *approved* for storing open time/temperature controlled for safety foods. Cold buffets and salad bars are designed for short-term display. They should be mechanically refrigerated, and have *approved* sneeze guards with side panel protection.

Ice Machines

If ice is to be used as a cooling medium for food and beverage items, the unit should be adequately designed and sized to meet all operational needs in an *approved* location.

Calculating the amount of refrigeration and freezer space should be based on the menu and expected food volume. The amount and location of refrigeration and freezer *equipment* should complement the food flow of the operation from receiving, storage and food processing, to the point of service.

Calculating Total Refrigerated/Freezer Storage Needs

Worksheet Help			
Worksheet Question #		**Food Code & Food Law***	**Guidance**
74	Refrigerated Storage	FC 3-501.14-16	Adequate refrigerated storage space must be provided to cool and hold cold *TCS* foods at 41°F or less. Information provided on the worksheet for this section will help determine if you have enough refrigerated storage space.
74	Walk-in Units		1. List the number or name for each walk-in refrigerator and freezer. This should be the same number or name used on the plans. 2. List the interior usable height of each walk-in. For example, for a unit with a 7' ceiling, the usable height would be 5.5' if the bottom shelf is 6" off the floor and storage will stop 1' from the ceiling. 3. List the interior length and width of each unit.
74	Upright Units		1. List the number or name for each upright or reach-in refrigerator and freezer unit that is provided for storage. **Do not list working, preparation or line refrigerators; these units are not intended for long term cold storage or cooling of foods.** 2. List the interior depth, width and height of each unit.
*FC =Michigan Modified Food Code. *FL = Food Law. To view the food code, food law and other fact sheets go to: http://www.michigan.gov/mdard/0,4610,7-125-50772_45851_61711---,00.html or call 800-292-3939 to request single free copies.			

To plan for needed cold storage, the following needs to be considered: menu, type of service, food preparation processes, number of meals per day, number of deliveries per week and adequate air ventilation in the area where refrigeration system will be located. The following formulas can help establish required cold storage (note: only 40% of any walk-in unit and 75% of any reach in unit actually provides usable space).

A Microsoft Excel based formula (Formula Master Version 7.0) sheet is available that can automatically calculate your needed cold storage utilizing the following formulas. This Formula Master Version 7.0 can be found at the very bottom of the following webpage: http://www.michigan.gov/mdard/0,4610,7-125-50772_50775_51203---,00.html

These formulas determine the amount of long term cold storage space needed. Preparation, working, and line coolers/freezers should not be used for long term cold storage. While these units may be needed for the operation of your facility, the space provided by these types of units should not count towards your overall needed cold storage space.

Additional refrigeration space that goes beyond the calculated amounts of the following formulas may be needed if you plan to store large bulk food items (i.e. boxes of whole produce, kegs, large meat boxes), non-food items, or plan to conduct food preparation activities (meat cutting, drying/aging/fermentation of food etc.) within your cold storage units. You will need to communicate to your *regulatory authority* if you plan to conduct these types of activities within your cold storage units. While the cold storage calculations provide a good baseline on how much cold storage space may be needed, your regulatory agency does have the authority to adjust these calculated amounts based upon the specific operations of your facility.

Formulas for Cold Storage Space- Based on meals served between refrigerated deliveries

Walk in cooler calculation:

$$\frac{\text{Vol. per meal (Ft}^3\text{) x Number of meals}}{.40}$$

Reach in cooler calculation:

$$\frac{\text{Vol. per meal (Ft}^3\text{) x Number of meals}}{.75}$$

Estimated typical meal volume:
Vol. per meal = .1 Ft^3

Number of meals = meals per day x days between refrigerated deliveries

****Sample calculation for walk in unit space needed for a restaurant serving 250 meals per day with 4 days between refrigerated deliveries.

Number of meals: 250 x 4 = 1000

$$\frac{.1\ Ft^3 \times 1000}{.40} = \mathbf{250\ Ft^3} \text{ of needed walk in space}$$

To calculate the needed interior storage space in Ft^2 for the above example, divide the Ft^3 by the usable interior height of the unit.

Example:

For walk in unit with 6 Ft of usable interior height

$$\frac{250\ Ft^3}{6\ Ft} = \mathbf{41.7\ Ft^2} \text{ of needed walk in space}$$

Interior floor area of walk in unit would have to be 41.7 Ft^2 to accommodate refrigeration storage of 1000 meals.

****Sample calculation for reach in space needed for a restaurant serving 250 meals per day with 4 days between refrigerated deliveries.

Number of meals: 250 x 4 = 1000

$$\frac{.1\ Ft^3 \times 1000}{.75} = \mathbf{133.3\ Ft^3} \text{ of needed reach in space}$$

Additional Guidelines for Refrigerated Storage *Equipment*

- Shelving for walk-in and reach-in refrigeration units is recommended to be *equipment* that is certified or classified to NSF/ANSI Standards for sanitation by an ANSI accredited certification program (e.g. NSF, UL, ETL).
- Interior finishes of walk-in and reach-in refrigeration units are recommended to be certified or classified to NSF/ANSI Standards for sanitation by an ANSI accredited certification program (e.g., NSF, UL, ETL).
- Refrigeration units are required to have numerically scaled indicating thermometers accurate to ± 3 °F. The temperature-sensing device must be located in the unit to measure air temperature in the warmest part. All such thermometers should have an externally mounted indicator to facilitate easy reading of the temperature of the unit. Refrigerators and freezers shall be capable of maintaining appropriate temperatures when evaluated under the test conditions of NSF/ANSI Standards by an ANSI accredited certification program.
- Air circulation within refrigeration and freezer units should not be obstructed and should allow for an even and consistent flow of cold air throughout the units.
- Following are recommended air temperature settings based upon type of refrigeration unit:

Refrigeration Type	Cabinet Air Temperature Setting
Storage & Display Cooler	41°F
Worktable Cooler	36°F - 38°F
Storage & Display Freezer	0°F

- Rapid pull-down refrigeration units must be capable of cooling cooked *TCS* foods from 135°F to 41°F within 6 hours total with the food required to go from 135°F to 70°F within the first 2 hours.
- *Approved* enclosure between the top of the unit and the ceiling if this space is 24 inches or less.
- Fixed *equipment* shall be spaced to allow for cleaning along the sides and behind, or it shall be *sealed* to adjoining *equipment* or walls.
- Walk-in freezer doors should be equipped with pressure relief ports.
- All walk-in units should be constructed and installed in accordance with the Michigan Modified Food Code and/or Food Law requirements.

Cooking, Reheating, Hot Holding *Equipment*

Cooking, reheating and hot holding units are designed to heat food to a required temperature within a required amount of time for food safety. Cooking, reheating, and hot holding temperatures have been determined using scientific analysis. The time and temperature requirements are based on the pathogens that are likely to be present on the product. It is recommended that the units are commercial grade and meet NSF/ANSI standards. Consideration must be taken with the placement and installation of cooking/reheating/hot holding *equipment* to ensure that proper ventilation and sanitation can occur. Construction of these units must be of *safe material*s and be durable, non-absorbent and *easily cleanable*.

NOTE: The commercial appliances described in this section are placed under a vent hood to evacuate grease, steam, and fumes, which could pose a potential fire or health risk. Refer to the topic on ventilation in this manual and contact the mechanical inspector within your region for specific requirements. If additional *equipment* or shelving will be installed above cooking *equipment*, a stainless steel coved panel with enclosed ends is recommended to be installed on the underside of the *equipment* or shelving to facilitate proper cleaning and prevent drip contamination onto the food below. (See photo.)

Units used to heat food are divided into two categories:

1. Cooking/Reheating
2. Hot Holding

All units in use must be able to meet the minimum required heated temperatures outlined in the Michigan Modified Food Code, Chapter 3-4 Destruction of Organisms of Public Health Concern. A copy of the Michigan Modified Food Code can be found at:
http://www.michigan.gov/documents/mdard/MI_Modified_2009_Food_Code_396675_7.pdf

Reheating *equipment* must be capable of raising the internal temperature of *TCS* foods rapidly (within a maximum of 2 hours) to at least 165 °F. Appropriate product thermometers will be required to monitor the food temperature.

The hot holding facilities and *equipment* must be capable of maintaining *TCS* foods at an internal temperature of 135°F or above during display, service and holding periods.

Stovetops and Grills

Gas, electric, or wood-burning stoves are used to cook and reheat product in pots or pans. A grill is like a stove with the ability to place the food directly over the flame.

Ovens

Ovens are thermally insulated chambers used for cooking or reheating foods. They can be gas, electric, or wood-burning units.

Combination Oven/Steamer (Combi Oven)

A Combi oven/steamer is similar to a convection oven with the ability to produce dry heat, moist heat, or a combination of the two.

Rice Cooker/Warmer

The unit is capable of cooking rice and then hot holding the rice at 135°F or above.

Kettle

Kettles are cooking pots used to boil large quantities of foods products. The units are generally in-place cleaning and should have the necessary tools for sanitation. Adequate floor drains must be present for disposal of spent water.

Rotisserie

Rotisseries are self-contained units that include a heat source and racks for skewers or spits. Beef, pork, or poultry is rotated over the fire to cook the food to the required temperature.

Small Appliances

Small appliances (table top) include microwaves, Panini presses, broilers, and toasters. These units are used to heat food to the required cook or reheat temperature depending on the application.

Fryers

Fryers are cooking devices that use oil heated to a high temperature. The hot oil has a flashpoint that can result in a fire. Follow the manufacturer's instructions for operation, maintenance and cleaning to prevent a fire incident.

Hot Tables

Hot tables are gas or electrically heated units that are designed to maintain temperature, and are not intended for cooking or reheating *TCS* foods. The design should allow for disassembly and deep cleaning of interior surfaces. These units must be able to maintain a minimum temperature of 135°F.

Customer Service Display Units/Hot Buffet Units

These are gas or electrically heated units that are designed to maintain temperature. They are not intended to cook or reheat *TCS* foods. They should be constructed of durable and *easily cleanable* materials. The design should allow for disassembly and deep cleaning of interior surfaces. The design should protect food from contamination that could occur from the environment or customers by using sneeze shields or covers. The units must be able to maintain a minimum temperature of 135°F.

General Food, *Equipment*, Utensil Protection

A separate food preparation area is recommended for handling, washing and preparing raw meat, fish, and poultry, if served. Where portable cutting boards are planned, it is recommended that they be color coded or labeled for each specific use.

All food being displayed, served, or held must be adequately protected from contamination by the use of: packaging; serving line, storage or food shield protector devices; display cases; or by other effective means, including dispensers.

Self-service *equipment* and food shields are recommended, not required, to comply with the applicable NSF/ANSI Standards (e.g. NSF/ANSI Standard 2).

NSF/ANSI Standard 2 has the general requirements for food shields:

- Food shields shall provide a barrier between the mouth of the customer and unpackaged food.
- For self-service lines:
    - The maximum vertical distance, opening through which customers reach, between a counter top and the bottom leading edge of a food shield shall be 13 inches.
    - The minimum horizontal distance between the leading edge of the food being served and the bottom leading edge of the a food shield must be three-fourths of the distance of the vertical opening through which customers reach.
    - The sum of a food shield's protected horizontal plane (X) and its protected vertical plane (Y) shall be greater than or equal to 20 inches. Either X or Y may equal 0.
    - A vertical barrier, end panels, shall be provided at each end of a food shield unless the food shield ends 3 inches or less from a wall. The end panels must be a minimum of 18 inches deep (front-to-back) beginning at the bottom leading edge of the food shield and can't be mounted more than 1.5 inches above the countertop. The minimum height of the end panels must be equal to the overall height of the food shield.
    - See NSF/ANSI Standard 2 diagram of food shield on next page.

Compliance criteria: (5.36.2.3): X + Y ≥ 20" (508 mm)
Either X or Y may = 0" (0 mm)

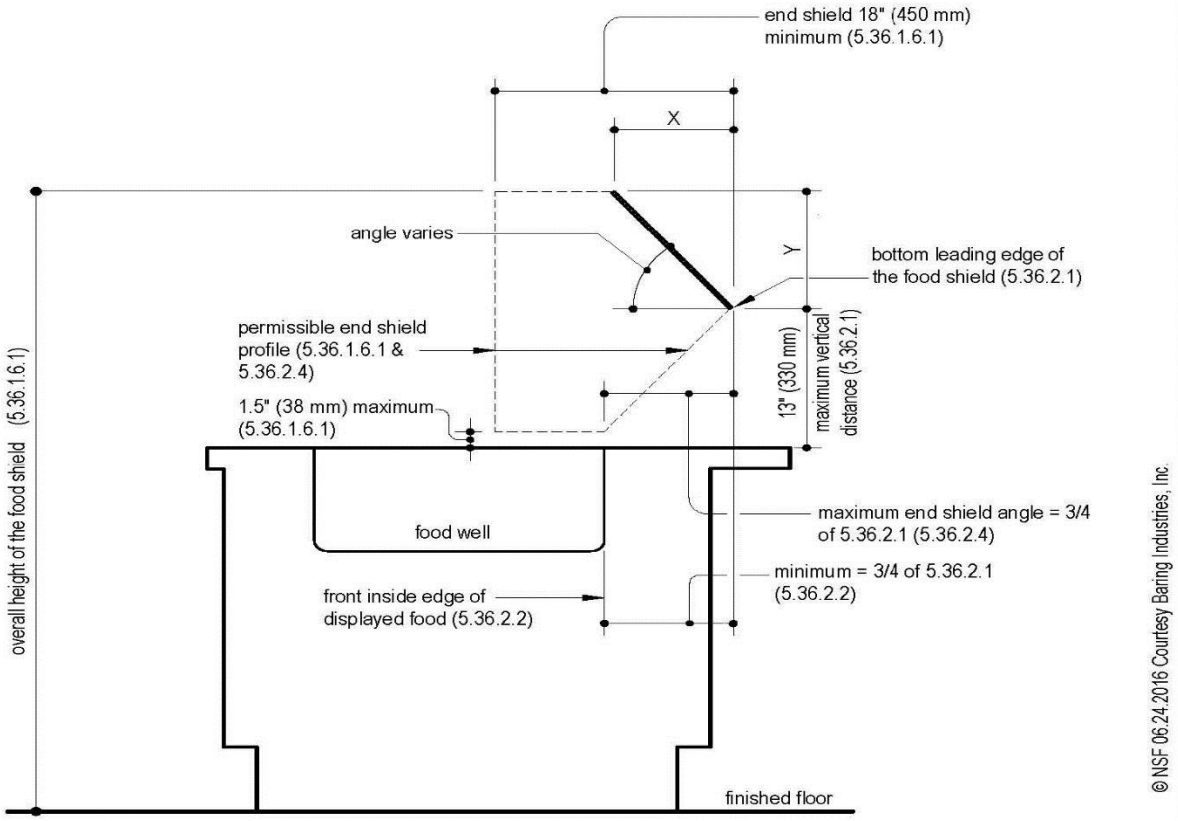

Figure 16A - Self-Service Food Shield w/Tray Rest (5.36.2)

- For vertical food shields:
  - Vertical food shields shall provide a barrier to a minimum height of 60 inches above the finished floor.
  - The maximum vertical distance from the bottom edge of the food shield and countertop shall be 6 inches.
  - The minimum horizontal distance between the front inside edge of displayed food and the front (customer side) face of the food shield shall be three-quarters of the vertical distance.
  - End shields shall be a vertical barrier that shall be a minimum of 12 inches deep (front-to-back) beginning at the bottom leading edge of the food shield. The minimum height of the vertical barrier shall be equal to the overall height of the food shield. The maximum distance from the bottom edge of the vertical barrier end shield and counter top shall be 1.5 inches. End shields are not needed if the vertical food shield ends 3 inches or less from a wall.
  - See NSF/ANSI Standard 2 diagram of vertical food shield on next page.

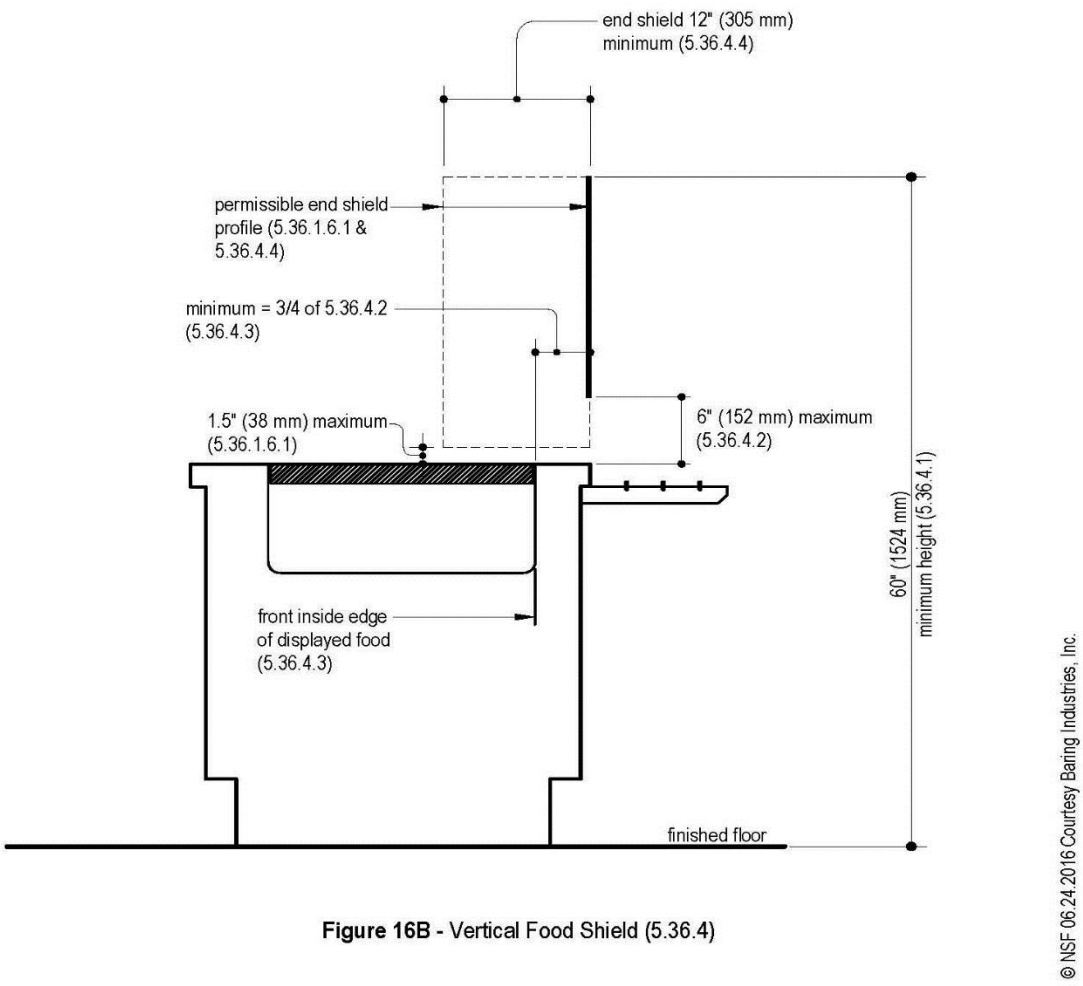

Figure 16B - Vertical Food Shield (5.36.4)

- Food shields shall be transparent and designed to minimize obstruction of the customer's view of the food.
- To protect against chipping, exposed edges of glass shall be protected by tight fitting channels, stripping materials, or other means such as rounding the edges of tempered glass.
- Different food shield measurements depend on the type of food shield being utilized. For entire full list of food shield requirements review NSF/ANSI Standard 2

Food Code requires clean *equipment* and utensils, laundered linens, and single-service and single use articles be stored:

- In a clean, dry location;
- Where they are not exposed to splash, dust, or other contamination; and
- At least 6 inches above the floor.

In-use utensils are required to be stored in a fashion that is compliance with Michigan Modified Food Code 3-304.12. Storage of these items should be outlined in your SOPs.

Part 5

Water Supply, *Sewage* Disposal & Grease Traps

Worksheet Help			
Question #		**Food Code & Food Law***	**Guidance**
29-30	Water Supply	FC 5-1	See information below.
31-32	*Sewage* Disposal	FC 5-403.11	See information below.
*FC =Michigan Modified Food Code. *FL = Food Law To view the food code, food law and other fact sheets go to: http://www.michigan.gov/mdard/0,4610,7-125-50772_45851_61711---,00.html or call 800-292-3939 to request single free copies.			

Water Supply

The primary concerns relative to the water supply in a *food establishment* are:

1. Ensure the facility is supplied with a safe and adequate water supply, including adequate supply of hot water; and
2. Verify that the water can remain safe while it is in the facility.

Safe Source: Start at the water source. Determine if the water is potable or non-potable. The availability of an *approved* public water supply must be verified. Any use of a noncommunity public water supply (well water) shall comply with local, state, and/or federal laws, and construction and testing standards. Contact the local health department for requirements if you plan to utilize noncommunity public water supply (well water). Additional information can be found at: http://www.michigan.gov/deq/0,4561,7-135-3313_3675_3692---,00.html

Sufficient potable water: Potable water shall be provided from a source constructed and operated according to law that meets the peak water demands of the *food establishment*.

Sewage Disposal

All *sewage* including liquid waste shall be disposed into a public *sewage* system or an individual (septic) *sewage* disposal system constructed and operated according to law. Where individual *sewage* disposal systems are utilized, the location shall be noted on the plans and certification of compliance with state and local regulations shall be provided. Contact the local health department for requirements if you plan to utilize an individual (septic) *sewage* disposal system. Additional information can be found at: http://www.michigan.gov/deq/0,4561,7-135-3313_71618_51002---,00.html

Grease Traps

A grease trap/interceptor is a chamber designed for wastewater to pass through and allow any grease to float to the top for retention as the remainder of the wastewater passes through. It is often required that waste water from fixtures or drains which would allow fats, oils, and grease to be discharged be directed to a grease trap/interceptor. Contact your local municipality's/jurisdiction's plumbing department for guidance in determining the number and size of grease traps, grease interceptors or catch basins. If installed, grease traps shall be properly spaced so they are easily accessible for servicing and cleaning. Refer to your local

municipality's/jurisdiction's plumbing department for the installation requirements.

Note: For *food establishment*s that are directly regulated by the state (MDARD), you will need to have the "**Local Health Department Request to Review On-site Water Supply and/or Wastewater System**" Form FI-235 filled out in the following circumstances:

- A newly licensed establishment (not a change of ownership) proposed for an existing building with an existing water well and/or septic system.
- A new owner who is proposing change in operations and/or the proposed operational changes cause an increase of wastewater flow or consumption of drinking water.

A copy and instructions for use of this of this form can be obtained from your state (MDARD) regulatory agent.

Part 6
Food Equipment & Installation

All *equipment* in a *food establishment* must comply with the design and construction standards contained in Chapter 4 of the Michigan Modified Food Code. Food *equipment* that is certified or classified to NSF/ANSI Standards for sanitation by an ANSI accredited certifier (NSF, UL, ETL) is deemed to comply with Parts 4-1 and 4-2 of the Michigan Modified Food Code.

Equipment including ice makers and ice storage *equipment* shall not be located under exposed or unprotected sewer lines, open stairwells or other sources of contamination.

The following *equipment* installation requirements will help to ensure proper spacing and sealing which will allow for adequate and easy cleaning:

- **Floor Mounted *Equipment*** *Equipment* should be mounted on *approved* lockable casters, gliders or wheels to facilitate easy moving, cleaning, and flexibility of operation whenever possible. Moveable *equipment* requiring utility services such as gas or electrical connections should be provided with easily accessible quick-disconnects or the utility service lines should be flexible and of sufficient length to permit moving the *equipment* for cleaning. If a flexible utility line is used, a safety chain that is shorter than the utility line must be installed. Check with local fire safety and building codes to ensure that such installations are acceptable.

Mobile Kitchen *Equipment* Mounted on Castors

Oven on Castors

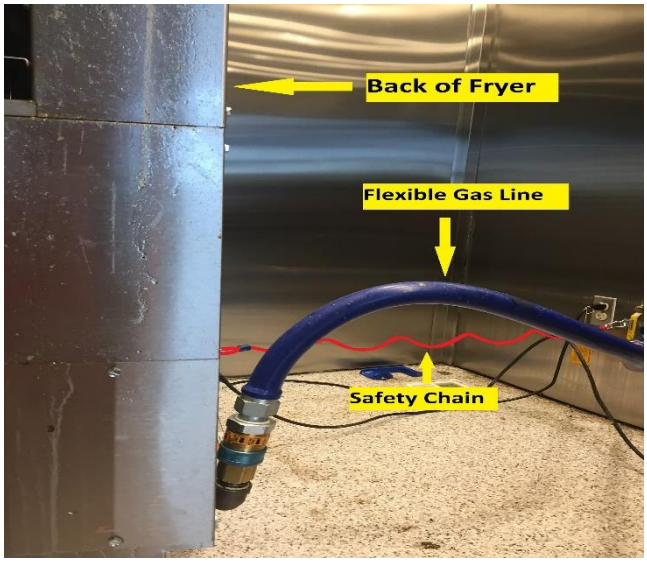

Flexible Gas Connection with Safety Chain

- Floor-mounted *equipment* not mounted on wheels or castors with utility connections should be:
  - *Sealed* to the floor around the entire perimeter of the *equipment*. The sealing compound should be pliable but not gummy or sticky, non-shrinking, retain elasticity and provide a water and vermin-tight joint); or
  - Installed on a solid, *smooth*, non-absorbent masonry base. Masonry bases and curbs should have a minimum height of 2" and be coved at the junction of the platform and the floor with at least a 1/4" radius. The *equipment* should overhang the base by at least 1" but not more than 4". Spaces between the masonry base and the *equipment* must be *sealed* as above; or

***Equipment* on Masonry Base**

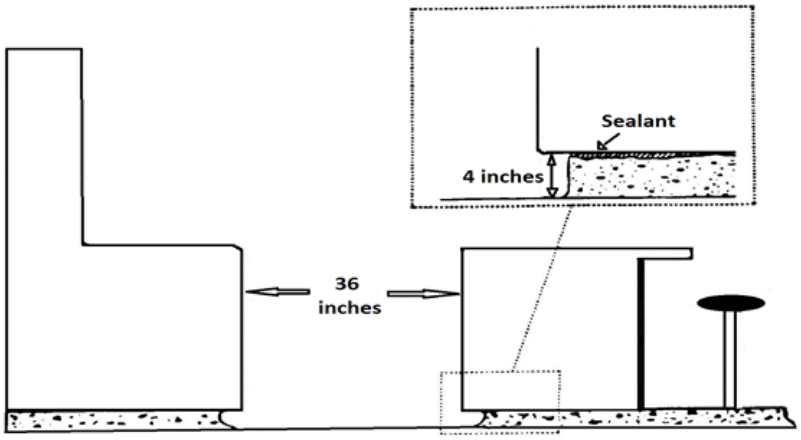

  - Elevated on legs to provide at least a 6" clearance between the floor and *equipment*. The legs shall contain no hollow open ends.

***Equipment* on Sanitary Leg**

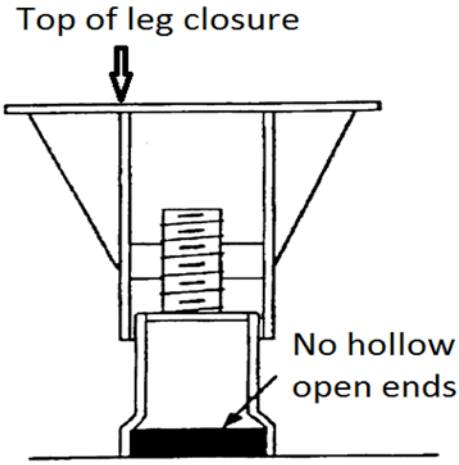

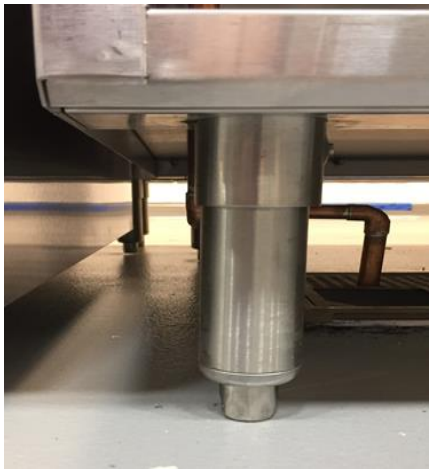

- For *equipment* not readily movable by one person, spacing between and behind *equipment* must be sufficient to permit cleaning. Provide at least 6" of clear unobstructed space under each piece of *equipment*.
- If *equipment* is against a wall and is not movable, the *equipment* must be joined to and/or *sealed* to the wall in a manner to prevent liquid waste, dust and debris from collecting between the wall and the *equipment*.
- When *equipment* is joined together or spreader plates are used between *equipment*, the resultant joint must be *sealed* to prevent liquid waste, dust and debris from collecting between the *equipment*.

- Unobstructed and functional aisle and working spaces must be provided. Consult with fire and building code authority regarding minimum width of aisle and working space.

- All utility and service lines and openings through the floor must be *sealed* adequately. Penetrations through walls and floors must be minimized. Exposed vertical and horizontal pipes and lines must be kept to a minimum. The installation of exposed horizontal utility lines and pipes on the floor is prohibited. Any insulation materials used on utility pipes or lines in the food preparation or dishwashing areas must be *smooth*, non-absorbent and easy to clean. It is desirable that switch boxes, electrical control panels, wall mounted cabinets, etc. be installed out of the cooking and dishwashing areas. Electrical units, which are installed in areas subject to splash from necessary cleaning operations or food preparation, should be watertight and washable.

***Equipment* Spacing**

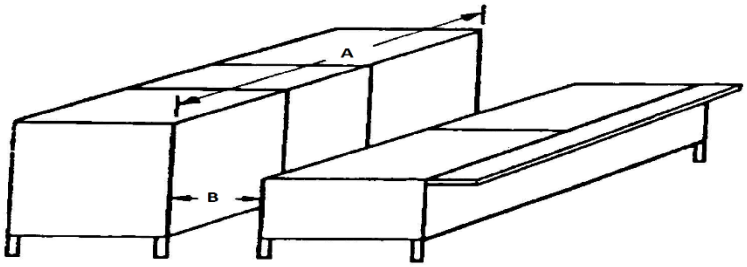

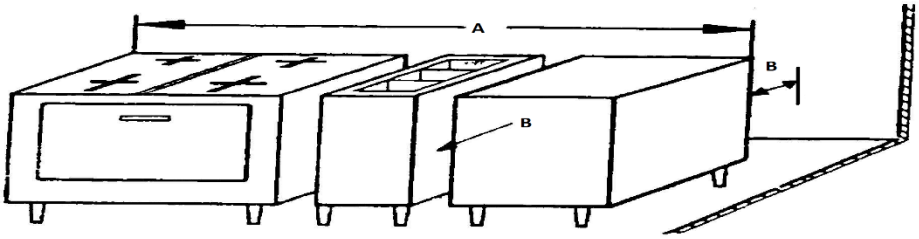

Recommended *equipment* spacing; provided access is available from both ends:

Equipment Length (A)	Space from Walls and Adjacent *Equipment* (B)
4' or less	6"
4'- 8'	12"
8' or more	18"

- **Counter Mounted *Equipment*** is defined as *equipment* that is not portable and is designed to be mounted off the floor on a table, counter, or shelf. All counter mounted *equipment* shall be:
  - *Sealed* to the table or counter; or
  - Elevated on *approved* legs to provide at least a 4" clearance between the table or counter and the *equipment* to facilitate cleaning.

***Equipment Sealed* to Counter Top**

***Equipment* Elevated 4" Above Counter**

- Other: *Equipment* that is open underneath, such as drain boards, dish tables, and other tables that are not moveable should be spaced 4" away from the wall or *sealed* to the wall for ease of cleaning. Metal legs of all tables and sinks in food preparation areas should be made of stainless steel. The shelves under food preparation tables should also be made of stainless steel.

Part 7

Dry Storage

Worksheet Help			
Question #		**Food Code & Food Law***	**Guidance**
75	Dry Storage	FC 3-305.11-12	Some establishments have separate rooms for storage of dry food and single-service items, while others use shelving within the main preparation area. If separate rooms are proposed for storage, list the room dimensions requested. If various shelving units are proposed, but there is no separate storage room list the dimensions of shelving proposed. **Note:** Do not list shelving for toxic/cleaning compounds and clean utensils. If a portion of a store room will be used for these items, please note the amount of the room set aside for this use.
*FC =Michigan Modified Food Code. *FL = Food Law. To view the food code, food law and other fact sheets go to: http://www.michigan.gov/mdard/0,4610,7-125-50772_45851_61711---,00.html or call 800-292-3939 to request single free copies.			

The dry storage space needed depends upon the menu, number of meals served between deliveries, frequency of deliveries, and the amount of single-use articles to be stored. The location of dry storage should be adjacent to the food preparation area and convenient to receiving. Food should not be stored under exposed sewer lines. Similarly, a cabinet that is used for the storage of food, shall not be located under exposed or unprotected sewer lines, open stairwells or other sources of contamination. Stationary shelving needs to have a minimum 6” floor clearance.

Shelving, dollies, racks, pallets and skids shall be corrosion-resistant, nonabsorbent and *smooth*. Pallets, racks and skids used for bulk cased or overwrapped items shall be designed to be moved by hand or by conveniently located hand trucks or forklifts. Shelving, dollies, racks, pallets and skids should be spaced away from walls to allow for cleaning and pest monitoring/inspection.

Approved food containers with tight-fitting covers and dollies should be used for storing bulk foods such as flour, cornmeal, sugar, dried beans, rice and similar items.

Adequate ventilation should be provided. Ideally, the storeroom should be free of uninsulated steam and water pipes, water heaters, transformers, refrigeration condensing units, steam generators or other heat producing *equipment*. Temperatures of 50°F to 70°F are recommended.

A Microsoft Excel based formulas (Formula Master Version 7.0) sheet is available that can automatically calculate your needed dry storage utilizing the following formulas. This Formula Master Version 7.0 can be found at the very bottom of the following webpage: http://www.michigan.gov/mdard/0,4610,7-125-50772_50775_51203---,00.html

The following formulas do not include space for storing *equipment*/utensils, cleaning supplies, maintenance supplies, empty bottles/cans, promotional items, etc. If these

items are intended to be stored with your dry storage items, you will need to communicate this to your *regulatory authority* and additional dry storage space may be needed that goes beyond these calculations. While the dry storage calculations provide a good baseline on how much dry storage space may be needed, your regulatory agency does have the authority to adjust these calculated amounts based upon the specific operations of your facility.

Formulas for Dry Storage Space

Formula #1: Dry storage room size based on meals served between dry good deliveries

$$\text{Dry Store Room Area (Ft}^2\text{)} = \frac{\text{Volume per meal x Number of meals}}{\text{Average height x Fraction of usable room area}}$$

- Volume per meal = 0.1 Ft^3
- Number of meals = meals per day x days between dry good deliveries
- Average usable room height = 4 to 7 feet
- Typical fraction of *usable room floor area = 0.3 to 0.8 (30% to 80%)
  *Usable floor area is the actual floor space that is available for use as storage space.

****Sample calculation for needed dry storage room area for a restaurant serving 100 meals per day with 10 days between deliveries. Assume 5 Ft of usable height is available and .3 of usable storeroom floor area:

Number of meals = 100 x 10 = 1000

$$\text{Required Dry Storage Room Area} = \frac{.1\ Ft^3 \times 1000\ \text{meals}}{5\ Ft \times 0.3} = \mathbf{67\ Ft^2}\ \text{of dry storage room area}$$

Formula #2: Linear feet shelving needed based on meals served between dry good deliveries

$$\text{Linear Feet of Shelving for Storage (Ft)} = \frac{\text{Volume per meal x Number of meals}}{D \times H \times C}$$

- Volume per meal = 0.1 Ft^3
- Number of meals = meals per day x days between dry good deliveries
- D = depth of shelves in feet
- H = height/clearance between shelves in feet
- C = 80% (.80) effective capacity of shelf height

****Sample calculation for needed dry storage shelving (no dry storage room proposed) for a restaurant serving 100 meals per day with 10 days between deliveries with proposed shelf depth of 1 Ft and height/clearance of 1.5 Ft between shelves.

Number of meals = 100 x 10 = 1000

$$\text{Linear feet of shelving needed} = \frac{0.1\ Ft^3 \times 1000\ \text{meals}}{1\ Ft \times 1.5\ Ft \times 0.8} = \mathbf{83\ linear\ Ft}\ \text{of shelving}$$

Part 8

Sinks & *Warewashing* Facilities

Worksheet Help			
Question #		**Food Code & Food Law***	**Guidance**
11	Dishwashing	FC 4-5 through 4-7	See information below
12	Service Sink	FC 5-203.13	See information below
*FC =Michigan Modified Food Code. *FL = Food Law. To view the food code, food law and other fact sheets go to: http://www.michigan.gov/mdard/0,4610,7-125-50772_45851_61711---,00.html or call 800-292-3939 to request single free copies.			

Sinks

Be sure to check your plans to be sure you have included the following types of sinks:

- Handsinks (see Part 2 of this manual)
- Food preparation sink(s)-*recommended*
- Service (mop/utility) sink(s)
- *Warewashing*: manual and/or mechanical
- Pre-rinse and "dump" sinks-*recommended*

Food Preparation Sink

Provide separate areas to segregate food handling operations involving raw and *ready-to-eat* products. For washing produce, thawing food, or cooling foods in an ice bath, it is advisable to provide a separate food preparation sink with a minimum 18" drainboard.

Service (mop/utility) sink

At least one service sink or one curbed cleaning facility equipped with a floor drain shall be provided and conveniently located for the cleaning of mops or similar wet floor cleaning tools and for the disposal of mop water and similar liquid waste.

There shall be a place to store mops and similar cleaning items where they can be air dried after use. The water supply must be protected against backflow (see Part 12 of this manual).

***Warewashing*: Manual and Mechanical**

The minimum requirement for *warewashing* in a *food establishment* is a three-compartment sink. A mechanical *warewashing* machine may be installed in addition to the three-compartment sink.

Manual *Warewashing*

For manual *warewashing*, provide a stainless-steel sink with no fewer than 3 compartments, with the exception that a two-compartment sink may be allowed by the *regulatory authority* under certain conditions.

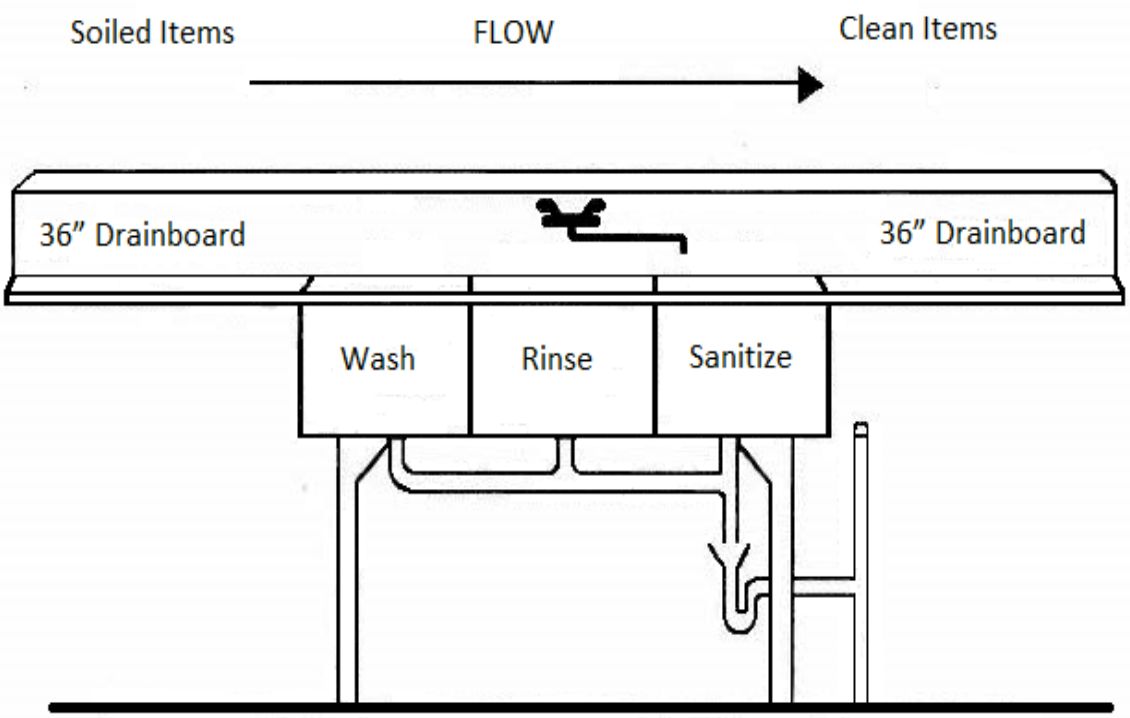

Recommended warewashing arrangement using three-compartment sink.
Drainboards for soiled dishes and for cleaned utensils must be adequate.
A 36″ drainboard should have a pitch of 1/8″ to 3/8″ per foot toward the sink.

THREE COMPARTMENT SINK WITH INDIRECT CONNECT

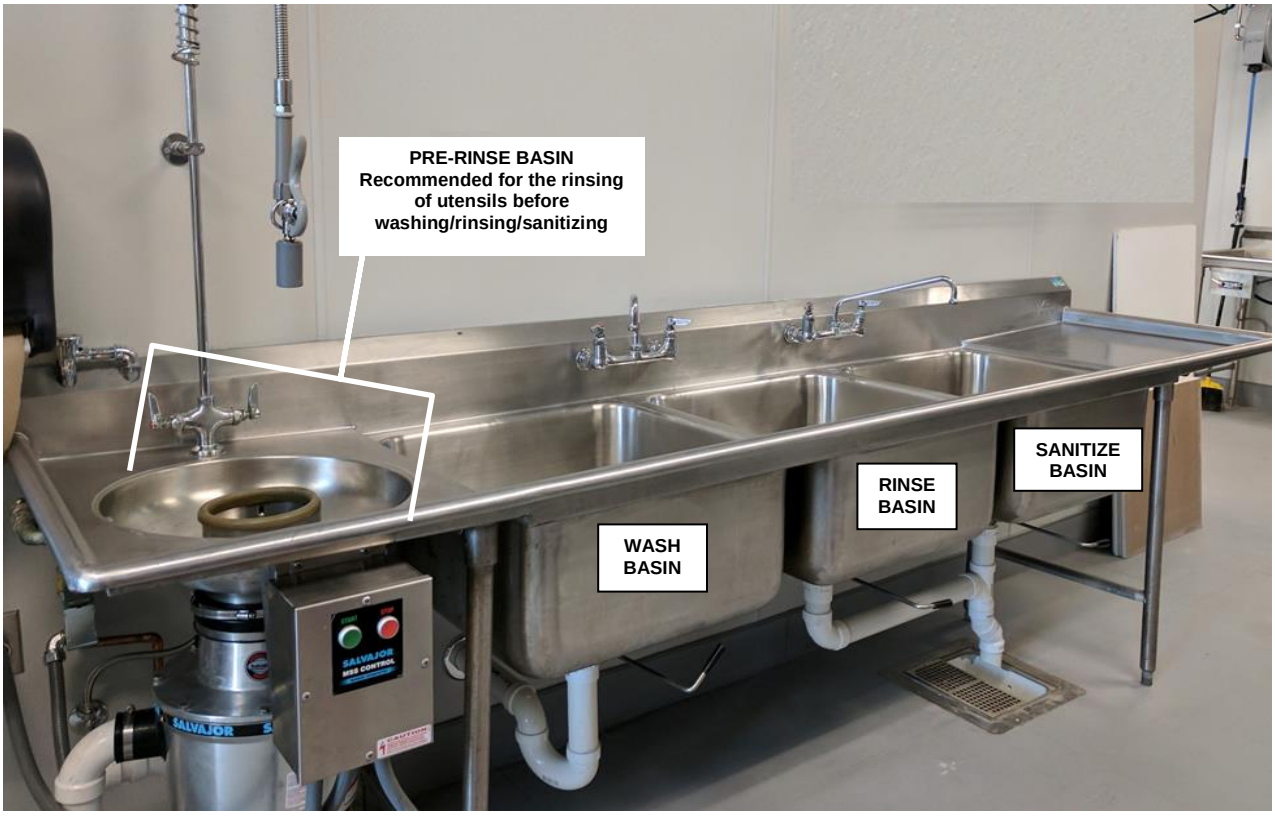

- The sink compartments shall be large enough to completely immerse the largest pot, pan or piece of *equipment* to be used in the establishment that will not be cleaned in-place.
- Each compartment shall be supplied with adequate hot and cold potable running water, temperature of the wash solution shall be maintained at not less than 110°F, or the temperature specified on the cleaning agent manufacturer's label instructions.
- Drainboards, utensil racks, or tables large enough to accommodate clean and soiled utensils shall be provided. The drain boards shall be self-draining.
- Locate a floor drain in the immediate vicinity of the sink in areas where wet pots, utensils and *equipment* are air-drying. *Approved* racks, shelves or dish tables are to be provided adjacent to the warewash sink.
- Provide adequate facilities for pre-flushing or pre-scraping *equipment* and utensils.
- An a*pproved* chemical test kit for determining sanitizer strength shall be available and used.
- If hot water is used to sanitize *equipment* and utensils, the means for heating the water to 171°F in the 3rd compartment must be identified. The racks for the immersion of *equipment* and utensil must be specified.
- Working supplies of cleaners and sanitizers must be stored in an *approved* location. A recommended storage location is on a wire shelf below the drainboard of the three-compartment sink.

Mechanical *Warewashing*

It is highly recommended that any installed mechanical *warewashing* machine meet nationally recognized standards and be certified or classified by an ANSI accredited certification program (NSF, UL, ETL). Check with the local plumbing authority regarding

installation of mechanical *warewashing* machine and the need to be certified or classified by an ANSI accredited certification program.

- The waste line for all mechanical *warewashing* machines must not be directly connected to the sewer line.
- Adequate facilities shall be provided to air dry washed utensils and *equipment*. Drainboards, utensil racks or tables must be large enough to allow proper and sufficient air drying of *equipment* and utensils.
- Storage facilities shall be provided to store cleaned and sanitized utensils and *equipment* at least 6" above the floor on fixed shelves or in enclosed cabinets protected from splash, dust, overhead plumbing or other contamination. The plan must specify the location and facilities used for storing all utensils and *equipment*.
- An adequate facility for pre-flushing or pre-scraping shall be provided on the soiled dish side of the dishwashing machine.
- Drainboards shall be provided, be of adequate size for the proper handling of utensils and located so as not to interfere with the proper use of the *warewashing* facilities. Mobile dish tables may be acceptable for use in lieu of drainboards.
- If the detergent dispenser or drying agent dispenser is not equipped with an integral backflow prevention device, the installation point of the dispenser shall be below the *vacuum breaker* on the *warewashing* machine.

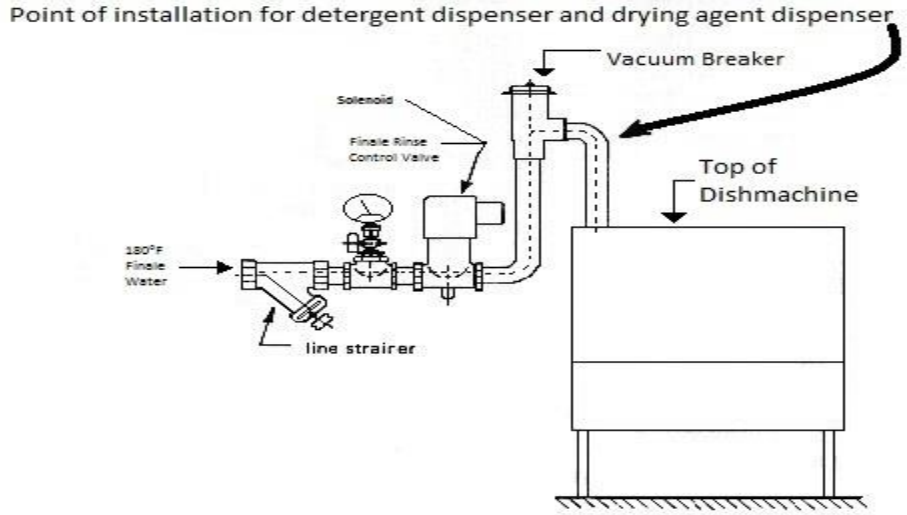

Recommended Warewashing Machine Installation

- A visual means to verify that detergents and sanitizers are delivered or a visual or audible alarm to signal if the detergents and sanitizers are not delivered to the respective washing and sanitizing cycles needs to be provided.
- For chemical sanitizing *warewashing* machines, an a*pproved* chemical test kit for determining sanitizer strength shall be available and used.
- For hot water sanitizing *warewashing* machines, the hot water booster for the *warewashing* machine must be identified during plan review.
- An a*pproved* maximum registering thermometer or high temperature test papers should be available and used for hot water sanitizing *warewashing* machines.

Pre-rinse and "dump" sinks

It is advised that separate sinks be provided for the pre-rinsing of utensils before *warewashing*. It is also recommended that "dump" sinks be provided in areas where liquid food wastes are generated such as at a bar or other beverage preparation areas. It is up to the *regulatory authority*'s discretion if these sinks need to be provided.

Pre-rinse sink

Dump sink

Part 9
Hot Water Supply Requirements

Worksheet Help			
Question #		**Food Code & Food Law***	**Guidance**
71	Hot Water Using Fixtures	FC 5-103.11	Identify and list all *equipment* that will be supplied with hot water.
72-73	Proposed Water Heaters	FC 5-103.11	When multiple separate water heaters are provided indicate which water heater serves which fixtures. Unless otherwise stated, a gas water heater will be assumed to be 75% efficient. A higher efficiency water heater will lower the necessary water heater size.
*FC =Michigan Modified Food Code. *FL = Food Law. To view the food code, food law and other fact sheets go to: http://www.michigan.gov/mdard/0,4610,7-125-50772_45851_61711---,00.html or call 800-292-3939 to request single free copies.			

The hot water supply shall be sufficient to satisfy peak hot water demands of the *food establishment*. Hot water for handwashing shall be a temperature of at least 100°F. Hot water for mechanical *warewashing*, that uses hot water to sanitize, must be boosted up to 150°F to 165°F for washing and 165°F to 180°F for sanitizing or according to the manufacturer's data plate on the machine. The temperature of the wash solution in spray-type warewashers that use chemicals to sanitize may not be less than 120°F. The temperature of the wash solution for manual *warewashing* must be maintained to not be less than 110°F. The water temperature for manual hot water sanitization must be at least 171°F. **For purposes of sizing the hot water generating capability, assume a supply temperature requirement of 140°F to the mechanical dishwashing machines unless otherwise indicated by manufacturer specification sheet.** In the absence of specific hot water usage figures for *equipment*, the following chart may be used to provide an approximation:

***Equipment* Type**	**Gallons Per Hour (GPH)**	
	High	Low
Food preparation sink	15	15
Single compartment sink	20*	15*
Double compartment sink	40*	30*
Triple (three) compartment sink	60*	45*
Overhead spray rinse	45	45
Bar sink-three compartment	20	20
Bar sink-four compartment	25	25
Chemical sanitizing glasswasher	60	60
Restroom Handsink & Kitchen Handsink	5	5
Cook sink	10	10
Hot water filling faucet	15	5
Bain-marie/steam table	10	10
Coffee urn	5	5
Kettle stand	5	5
Garbage can washer	50	50
Nine and twelve-pound clothes washer	45	45
Sixteen-pound clothes washer	60	60
Shower heads	20	20
Mop sink	15	5
Dump sink	5	5

High-To be used when multi-use eating utensils are utilized.
Low-To be used where single service eating utensils are utilized.

*Calculation for determining gallons per hour (GPH) for a specific sink based upon the dimensions of the sink. Formula for calculating GPH:

GPH = Vat Size (in^3) x (# of compartments) x 0.003255 in^3**

****.003255 in^3 is a constant which is 75% of sink capacity X density of water (7.5 gal/Ft^3) and then divided by the number of in^3 in a Ft^3 (1728 in^3/Ft^3)**

A sample calculation for a 3-compartment sink with a single compartment size of 21" long, 18" wide, and 14" deep is show below.

First calculate the Volume of the compartment: Volume = Length x Width x Depth

21" x 18" x 14" = 5292 in^3

5292 in^3 x 3 x 0.003255 in^3= **51.67 GPH**

The 3-compartment sink used in this example would use 51.67 GPH
This calculation considers that a sink is typically only filled to 75% capacity.

One way to estimate the projected hot water demand (gallons per hour final rinse) of mechanical *warewashing* machines, pot and pan washers and silverware washers, is to refer to the manufacturer's' specification sheet for the make and model of the machine. The GPH for a particular dishmachine certified to *NSF/ANSI 3 - Commercial Warewashing Equipment* may be found at webpage: http://info.nsf.org/Certified/food/Listings.asp?Standard=003

A Microsoft Excel based formulas (Formula Master Version 7.0) sheet is available that can automatically calculate your needed hot water capacity utilizing the following formulas. This Formula Master Version 7.0 can be found at the very bottom of the following webpage: http://www.michigan.gov/mdard/0,4610,7-125-50772_50775_51203---,00.html

To determine the required capacity and recuperative rate of the hot water generating *equipment*, it is necessary to calculate the demand in gallons per hour (GPH) and determine the temperature rise required (assume an incoming water temperature of 40°F to the *food establishment* unless specific data are available) for each piece of *equipment*. These figures can then be converted to BTU's (for gas fired heaters) or KW (for electrical heaters). The required BTU or KW capacity of the heater will then be determined by adding up the individual BTU or KW requirements for each piece of *equipment*.

Note: To calculate BTUs or KWs, use the following formulas: (1 gallon of water = 8.33 lbs.)

For gas heaters (in BTUs): Required BTU = $\frac{\text{Gallons per hour of water x Temp. rise x 8.33}}{\text{. 75 (operating efficiency)}}$

For electrical heaters (in KW): Required KW = $\frac{\text{Gallons per hour of water x Temp. rise x 8.33}}{\text{3412 (BTU's per KW)}}$

The following example will illustrate of the above method of approximating the size of the hot water heater needed for specified *equipment*:

Equipment	Gallons Per Hour Demand from Chart	Temperature Required	Temp. Rise
3-compartment sink	60	110°F	70°F

$$\frac{60\text{ (GPH) x 70° temp. rise x 8.33}}{\text{.75 (operating efficiency)}} = \mathbf{46{,}648\ BTUs}$$

OR

$$\frac{60\text{ (GPH) x 70° temp rise x 8.33}}{\text{3412 (BTUs per KW)}} = \mathbf{10.25\ KW}$$

Assume an incoming water temperature of 40°F into the *food establishment*.

Equipment	Gallons Per Hour Demand from Chart	Temperature Required	Temp. Rise
Hand sink	5	100°F	60°F

$$\frac{5\text{ (GPH) x 60° temp rise x 8.33}}{\text{.75 (operating efficiency)}} = \mathbf{3{,}332\ BTUs}$$

OR

$$\frac{5\text{ (GPH) x 60° temp rise x 8.33}}{\text{3412 (BTU per KW)}} = \mathbf{0.73\ KW}$$

Assume an incoming water temperature of 40°F into the *food establishment*.

Equipment	Gallons Per Hour Demand from Mfgr.	Temperature Required	Temp. Rise
Mechanical Warewasher	64	140°F	100°F

$$\frac{64\text{ (GPH) x 100° temp rise x 8.33}}{\text{.75 (operating efficiency)}} = \mathbf{71{,}083\ BTUs}$$

OR

$$\frac{64\text{ (GPH) x 100° temp. rise x 8.33}}{\text{3412 (BTU per KW)}} = \mathbf{15.62\ KW}$$

Assume an incoming water temperature of 40°F into the *food establishment*.

For the listed example with hot water using *equipment* of a 3-compartment sink, hand sink, and mechanical warewasher, the total demand in BTU's or KW for the primary hot water heater would be:

3-compartment sink	=	46,648 BTU	or	10.25 KW
Hand sink	=	3,332 BTU	or	0.73 KW
Mechanical warewasher =		71,083 BTU	or	15.62 KW
TOTAL DEMAND=		**121,063 BTU**	or	**26.6 KW**

If the mechanical *warewashing* machine is a hot water sanitizing machine, then a booster heater must be provided to boost the required mechanical *warewashing* machine GPH demand an additional 40°F to attain the required 180°F final rinse temperature.

Equipment	Gallons Per Hour Demand from Mfgr.	Temperature Required	Temp. Rise
Booster heater for hot water sanitizing mechanical warewasher	64	180°F	40°F

$$\frac{64\ (\text{GPH}) \times 40° \text{ temp rise} \times 8.33}{.\ 75 \text{ (operating efficiency)}} = \mathbf{28{,}433\ BTUs}$$

OR

$$\frac{64\ (\text{GPH}) \times 40° \text{ temp rise} \times 8.33}{3412 \text{ (BTU per KW)}} = \mathbf{6.2\ KW}$$

A booster heater for the hot water sanitizing warewasher must be provided and sized to supply an additional 28,433 BTUs or 6.2 KW.

Note: It is recommended that a minimum tank size of 50 gallons be provided. A tank size may need to be greater than or less than 50 gallons depending upon the operations of your facility. Work with your *regulatory authority* regarding appropriate tank size.

Tankless Water Heaters

Tankless water heaters are units that do not store hot water and only generate hot water at time of demand (e.g. when hot water is turned on at a fixture). Determining if tankless unit(s) will provide enough hot water capacity depends upon the gallons per minute (GPM) a tankless unit can produce at a given temperature rise; this is known as flow rate. The GPM produced at a particular temperature rinse can be found on the flow rate chart provided by the manufacture of the tankless unit you plan to utilize.

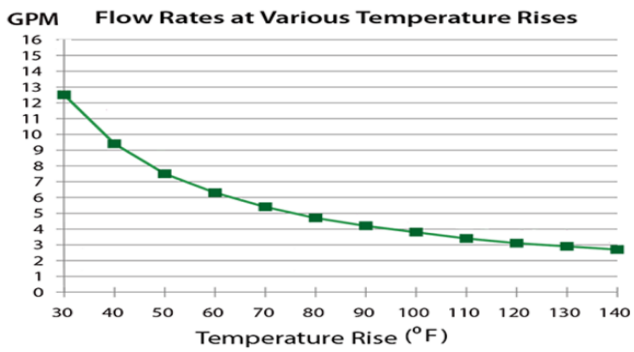

Flow Rate Chart for Tankless Water

Since hot water is produced at time of demand, the flow rate of hot water provided by a tankless unit is slower than a traditional tank water heater. To compensate for this slower rate, typically more than one tankless unit needs to be installed. The number of tankless units needed depends upon the hot water GPM demand of the facility. When installing multiple tankless units, you total up the GPM, at a particular temperature rise, of all planned tankless units installed in parallel and compare this to the overall GPM of hot water demand of the facility. You would want the total GPM, at a particular temperature rinse, of all the tankless units to be equal to or greater then the GPM demand of the facility.

A Microsoft Excel based formulas (Formula Master Version 7.0) sheet is available that can used in help determining if the proposed tankless unit(s) will provide sufficient hot water capacity for the facility. This Formula Master Version 7.0 can be found at the very bottom of the following webpage:
http://www.michigan.gov/mdard/0,4610,7-125-50772_50775_51203---,00.html

Series Vs. Parallel Installation of Water Heaters

It is common to have more than one water heater present in a facility, especially with tankless units which often require more than one to meet the total GPM demand of the fixtures. These multiple water heating units can be plumbed in series or parallel.

- When plumbed in series, only one water heater has an incoming cold water line and then that water heater feeds hot water into the next water heater. Series installation of multiple water heaters does not increase your overall energy input or flow rate since the water has to flow through each unit before it goes out to the facility equipment for usage. For series installation, the energy input and flow rate are limited to the rating of the last water heater in the series, it is not a cumulative amount of all the water heaters in the series.
- When plumbed in parallel, it means all the water heaters have their own incoming cold water line and then all the units feed into an outgoing hot water line. Parallel installation does increase your overall energy input and flow rate. It combines the individual energy inputs and flow rates of each water heater to give you a larger final energy input and flow rate. It is a cumulative amount of all the water heaters.

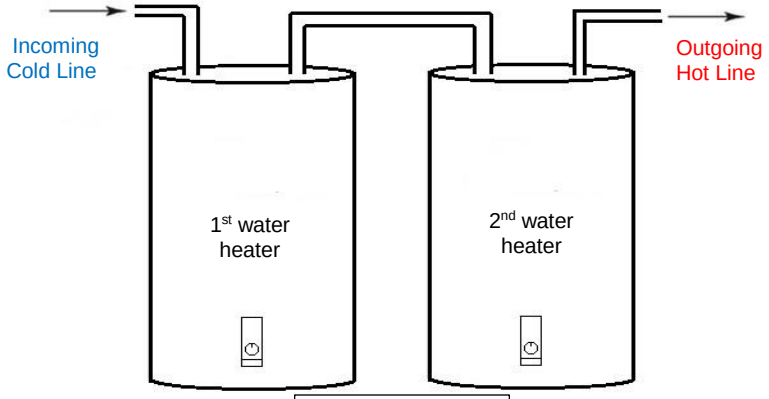

Plumbed in Series

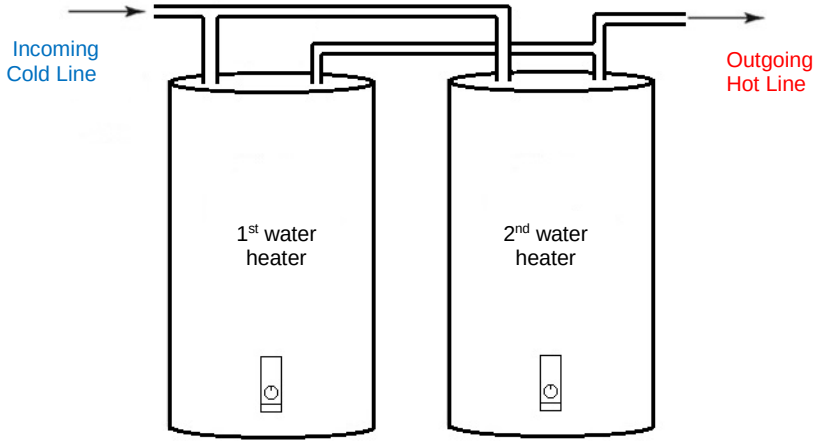

Plumbed in Parallel

Part 10

Finish Schedule: Floors, Walls & Ceilings

Worksheet Help			
Question #		**Food Code & Food Law***	**Guidance**
15- 28	Room Finishes	FC 6-1 FC 6-201.11-18	See information below.
*FC =Michigan Modified Food Code. *FL = Food Law. To view the food code, food law and other fact sheets go to: http://www.michigan.gov/mdard/0,4610,7-125-50772_45851_61711---,00.html or call 800-292-3939 to request single free copies.			

Recommended Interior Finishes:

1. Enamel coated steel (or other corrosion resistant surface)	9. Stainless steel
2. *Sealed* concrete blocks or bricks	10. Aluminum
3. Commercial grade vinyl composition tile	11. Ceramic tile
4. Commercial grade sheet vinyl (no felt backing)	12. Painted drywall
5. Fiberglass reinforced plastic (FRP) panel	13. Epoxy, enamel, latex painted or glazed drywall
6. Vinyl clad acoustic tile	14. Plastic laminate
7. Poured seamless *sealed* concrete or poured synthetic	15. Acoustic tile
8. *Sealed* concrete	16. Quarry tile

The following chart provides guidance for floors, walls and ceilings. The numbers refer to the above table.

Kitchen	Floor	Wall	Ceiling
Food Preparation/Bar Serving Area	3, 7, 16	2, 5, 9, 10, 11, 13	6, 13, 14
Cooking	3, 7, 16	9, 10, 11	6, 13, 14
***Warewashing* Area**	3, 7, 16	2, 5, 9, 10, 13	6, 13, 14
Food Storage	3, 4, 7, 8, 16	2, 5, 13	12, 15
Janitor Closet	7, 16	2, 5, 13	6, 13, 14
Garbage Room	3, 4, 7, 16	2, 5, 13	6, 13, 14
Walk-in Refrigerators & Freezers	3, 7, 9, 10, 16	1, 9, 10	1, 9, 10
Other Storage	3, 4, 7, 8, 16	12	12, 15
Dressing Rooms	3, 4, 7, 16	12	6, 12, 13, 14
Toilet Room	3, 4, 7, 16	2, 5, 13	6, 13, 14

Floors

- All floor coverings in food preparation, food storage, utensil-washing areas, walk-in refrigeration units, dressing rooms, locker rooms, toilet rooms and vestibules must be *smooth*, nonabsorbent, *easily cleanable*, durable, and are recommended to be commercial grade. *Equipment* must not puncture or indent the floor. Anti-slip flooring may only be used in high traffic areas.
- Any alternate materials not listed in the above chart must be submitted for evaluation.
- There must be coving at base junctures that is compatible with both wall and floor coverings. The coving should provide at least 1/4-inch radius and 4" in height.

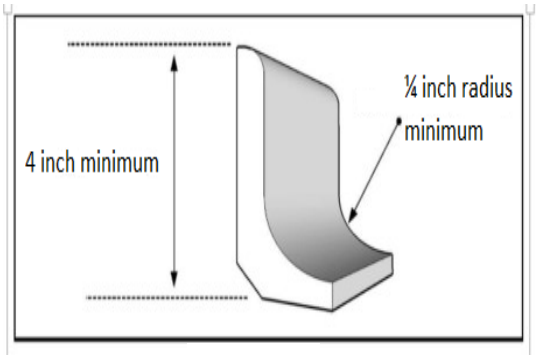

Coving

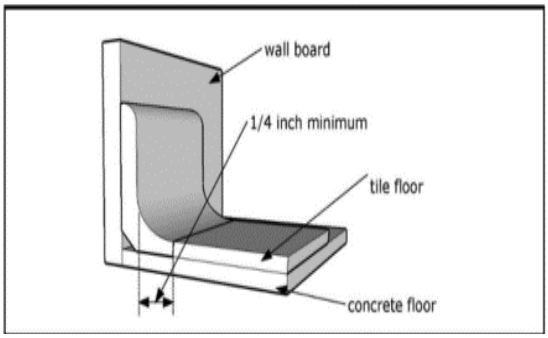

Quarry tile cove base floor flush with floor

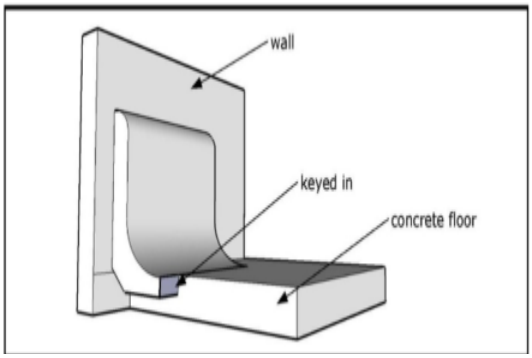

Quarry tile cove base integral to concrete floor

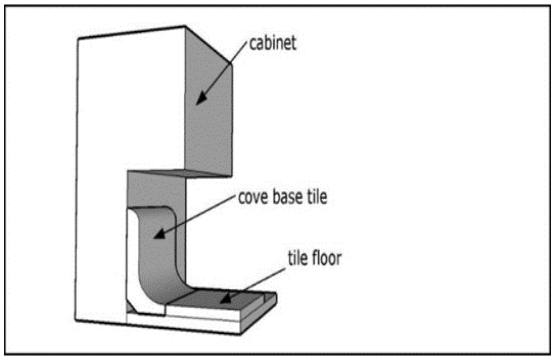

Example cove base; cabinet toe kick

- Floor drains, floor sinks and the surrounding area must be easily accessible for cleaning.
- Properly installed, trapped floor drains shall be provided in floors that are water-flushed for cleaning or that receive discharges of water or other fluid waste from *equipment*, or in areas where pressure spray methods for cleaning *equipment* are used. Floors should be sloped to the drain at least 1/8" per foot.
- Grouting should be non-absorbent and impregnated with epoxy, silicone, polyurethane or equivalent compound.
- All walk-in refrigeration units, either with prefabricated floors and without, should be installed in accordance with the manufacturer's' installation requirements.

Custom cabinetry shall be constructed of durable materials with surfaces that are *smooth*, non-permeable and light colored for easy cleaning. This includes the interior surfaces (e.g., beverage stations, salad or buffet units, service counters and the underside of open countertops).

Walls

- The walls, including non-supporting partitions, wall coverings and ceilings of walk-in refrigeration units, food preparation areas, *equipment* washing and utensil washing areas, toilet rooms and vestibules shall be *smooth*, non-absorbent, and capable of withstanding repeated washing. Light colors are recommended for walls and ceilings. Studs, joists and rafters shall not be exposed in walk-in refrigeration units, food preparation areas, *equipment* washing and utensil washing areas, toilet rooms and vestibules. Where permitted, exposed studs, joists and rafters must be finished to provide an *easily cleanable* surface.
- All alternate materials not listed in the above chart must be submitted for evaluation.
- Glazed surfaces should be glazed block or brick, or ceramic tile. Grouting must be non-absorbent and impregnated with epoxy, silicone, polyurethane or an equivalent compound. Concrete block, if used, must be rendered non-porous and *smooth* by the application of an

approved block filler followed by the application of an epoxy-type covering or equivalent. All mortar joints shall be only slightly tooled and suitably finished to render them *easily cleanable*.

- Joint finishes should be compatible with the wall structure. Voids should be eliminated at joints.

Ceilings

- Finishes shall be light-colored, *smooth*, non-absorbent and *easily cleanable*.

Part 11
Toilet Facilities

Toilet facilities shall be installed according to law and shall be the number required by law. They shall be conveniently located and shall be accessible to employees at all times. Toilet facilities shall be accessible in accordance with the Americans with Disabilities Act (ADA) of 1990. Consult your local building department for requirements. Specific plumbing requirements are in the Michigan Plumbing Code, which adopts the International Plumbing Code. Consult with the area plumbing regulatory agency regarding requirements in the Michigan Plumbing Code.

Toilets and urinals shall be designed to be *easily cleanable* and shall have integral backflow prevention devices as required by law. Toilet rooms shall be completely enclosed and shall have tight-fitting, self-closing doors and shall be vented to the outside if subject to odors.

Food facilities such as grocery stores, convenience stores and *food service establishment*s may have rest rooms that open directly into the food preparation area. Other facilities, typically processing plants, must provide employee rest rooms that do not open into areas where food is exposed to airborne contamination, except where alternate means have been taken to protect against such contamination (such as double doors or positive air-flow systems).

A sign or poster that notifies food employees to wash their hands shall be provided at all handwashing sinks used by food employees and shall be clearly visible to food employees.

Part 12

Plumbing & Cross-Connection Control

Worksheet Help			
Question #		**Food Code & Food Law ***	**Guidance**
38-69	Plumbing Cross-Connections	FC 5-202.13 &14 FC 5-203.14 &15 FC 5-204.12 FC 5-402.11 FL 289.6125	The worksheet asks that a table be filled out showing what backflow prevention devices or methods are proposed for your facility.
*FC = Michigan Modified Food Code. *FL = Food Law. To view the food code, food law and other fact sheets go to: http://www.michigan.gov/mdard/0,4610,7-125-50772_45851_61711---,00.html or call 800-292-3939 to request single free copies.			

Typical possible correct responses are shown for the worksheet cross-connection table, next page. Each "X" on this cross-connection table represents one possible answer. It is recommended that your plumber or architect complete this table. Some responses are only correct under certain circumstances.

Fixture	Sewage Disposal			Water Supply					
	Air Gap	Air Break	Direct Connect	AVB	PVB	RPZ	Hose Bibb	DC w/AV	Air Gap
38. Dishwasher	X	X		X					X
39. Glasswasher	X	X		X					X
40. Garbage grinder			X	X	X				X
41. Ice machines	X								
42. Ice storage bin	X								
43. Mop sink			X	X					X
44. 3-compartment sink	X	X	X						X
45. Culinary (food preparation) sink	X	X							X
46. Other sinks, except handsinks, (2 or 1 compartment)	X	X	X						X
47. Steam tables/Bain-marie	X	X		X					X
48. Dipper wells	X	X							X
49. Hose connections				X	X		X		
50. Refrigeration condensate drain lines	X	X							
51. Beverage dispenser with carbonator								X	
52. Water softener drain	X	X							
53. Walk-in floor drain	X	X							
54. Wok range	X	X		X	X	X			
55. Chemical dispenser				X	X				X
56. Outside sprinkler or irrigation system				X	X	X			
57. Power washer					X	X			
58. Retractable hose reel					X	X			X
59. Toilet			X		Anti-siphon ballcock				
60. Urinal			X	X					
61. Boiler						X		X	
62. Espresso machine	X	X				X		X	
63. Combi-style oven	X	X				X		X	
64. Kettle	X	X		X	X	X			X
65. Rethermalizer	X	X			X	X			X
66. Steamer	X	X			X	X			
67. Overhead spray rinse					X				X
68. Hot water dispenser				X				X	X
69. Coffee machines/juice dispensers and other non-carbonated beverage dispensers								X	X
70. Other									

<u>Backflow Prevention Device Abbreviations</u>
AVB=atmospheric vacuum breaker
PVB=pressure vacuum breaker
RPZ=reduced pressure principle backflow preventer
DC w/AV= Double check valve with an atmospheric vent
Further information on backflow preventers and ASSE ratings can be found on page 59.

Backflow Prevention for Water Supply Lines

Cross-Connections

A cross-connection is any physical connection or arrangement between two otherwise separate piping systems, one of which contains potable water and the other either water of unknown or questionable safety or steam, gas or chemical, whereby there exists the possibility for the flow from one system to the other, with the direction of flow depending on the pressure differential between the two systems. When a cross-connection is present it creates the potential for backflow which may introduce contaminants or pollutants into the potable water line. Ideally, it is best to not have any cross-connections, but in certain situations they are unavoidable. When an installation requires a cross-connection, it must be properly protected with an acceptable backflow prevention method or assembly/device to eliminate any potential for a reverse flow back into the potable water supply. An unprotected cross-connection threatens the health and safety of individuals and may contaminate food or beverage products utilizing water from that system.

Backflow

Backflow is a reversal in flow of water that is opposite to the expected or intended direction. The reversal in flow is undesirable. However, a properly protected system can remain safe. There are two types of backflow: "backpressure" and "backsiphonage".

Backpressure occurs when both systems (potable and non-potable) are under pressure. Backflow occurs when the non-potable system has greater pressure than the potable system. This pressure differential pushes possible contaminants or pollutants into the potable supply. Principle causes include:

- Thermal expansion of the water (boiler)
- High pressure generated by pumps downstream
- Elevation

Backsiphonage occurs when the pressure in the water supply system drops below atmospheric pressure and the non-potable source is drawn or siphoned into the water supply. Principle causes include:

- Undersized sections of pipe can create an aspirator effect in the restricted area.
- A break or repair in a supply line can create a vacuum (as gravity drains the water out) on the elevated portions of the system above the affected area.
- A high-water withdrawal, such as firefighting or water main flushing, can create a vacuum. The withdrawal is more likely to create stronger negative pressure at the higher elevation of the system.
- A vacuum can be induced on the suction side of a booster pump, such as high-rise buildings and processing plants.

Two Types of Cross-Connections:

- **Direct Connection:** a cross-connection that is subject to both backpressure and backsiphonage.
- **Indirect Connection:** a cross-connection that is only subject to backsiphonage.

Methods of Protecting Water Supply Lines from Backflow
Air Gap
An air gap is the most desirable method of backflow prevention. It is simple, economical, non-mechanical, fail safe, and can be used for potential backsiphonage and backpressure applications. An air gap is the unobstructed vertical air space that separates the end of a supply line and the flood level rim of a receptacle. The receptacle may be a sink, coffee urn, steam kettle, floor drain, floor sink, etc. The air gap must be the greater of the two – a minimum of 1 inch or twice the diameter of the supply pipe. The following are some air gap applications:

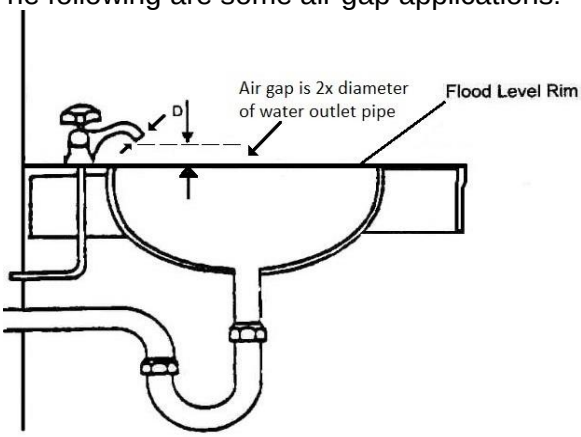

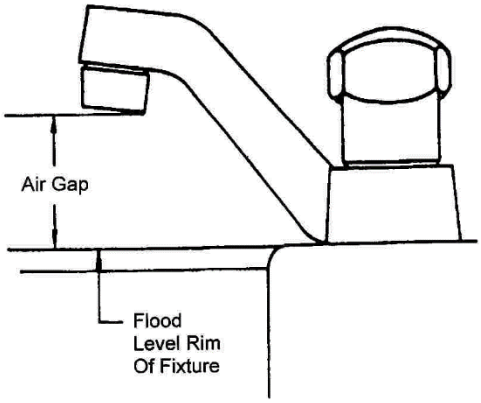

Ice Cream Dipper Well

Water Fill to Steam Kettle

Backflow Assemblies & Devices

If an air gap is not possible, then a mechanical backflow assembly or device can be utilized to protect water supply line. The type of mechanical backflow assembly or device selected must be appropriate for the degree of hazard and specific application. All backflow prevention devices must be installed so they are accessible for inspection and repair. All mechanical devices are required to be constructed to standards of American Society of Sanitary Engineers (ASSE). The level of hazard is a consideration in the selection of the appropriate device.

High Hazard situations occur when potential contamination can be introduced into the potable water system. A contamination is an impairment of the quality of the potable water that creates an actual hazard to the public health through poisoning or the spread of disease by *sewage*, industrial fluids or waste. Examples of contaminants include pesticides, chemicals, and infectious microorganisms.

Low Hazard situations occur when potential pollution can be introduced into the potable water system. A pollution is an impairment of the quality of the potable water to a degree that does not create a hazard to public health but that does adversely and unreasonably affect the aesthetic quality of such potable water for use. Examples of pollutants are turbidity, food, beverages, and food coloring.

Hose Bib Vacuum Breaker ASSE 1011 (high or low hazard)

A hose bib vacuum breaker is installed on the end of a hose bib (sill cock, boiler drain, etc.) or anywhere a hose can be connected. The device only provides protection against backsiphonage.

Installation and Use:

- Shut-off valves must be located upstream from the *vacuum breaker* with no valves installed downstream that may put it under constant pressure.
- Spring-loaded shut-off spray valves must be removed when the hose is not in active use.
- ***Approved* for high and low hazards, non-continuous pressure, and no potential backpressure.**

Atmospheric Vacuum Breaker ASSE 1001 (high or low hazard)

An atmospheric vacuum breaker works like a hose bib vacuum breaker and is typically found at mop sinks, spray nozzles, dishmachines, areas where a hose can be connected and other areas where there are no shut-off valves downstream. The device only provides protection against backsiphonage.

Installation and Use:

- The mushroom-shaped device must be installed vertically. The unit typically must be elevated at least 6 inches above the highest source of contamination downstream of the unit.
- Shut-off valves must be located upstream from this *vacuum breaker* with no valves installed downstream that may put it under constant pressure.
- ***Approved* for high and low hazards, non-continuous pressure, and no potential for backpressure.**

Pressure Vacuum Breaker ASSE 1020 and ASSE 1056 (high or low hazard)

The pressure *vacuum breaker* is like the atmospheric *vacuum breaker* except that it has two test cocks and two gate or ball valves for testing the unit. The device only provides protection against *backsiphonage*.

Installation and Use:

- The unit must be installed according to manufacturer's instructions in reference to the highest elevated inlet or fixture on its downstream side. The device must be located to be accessible for testing and servicing.
- The device can be under constant pressure and may have shut off valves located upstream and downstream of the unit.
- **The unit is a*pproved* for high and low hazard, continuous pressure, and no potential for backpressure.**

Double check valves with Intermediate Atmospheric Vent
ASSE 1012 and ASSE 1022 (low hazard)

Vented double check backflow preventers are installed on water supply lines to foodservice *equipment*, in which there is no potential of high hazard, to ensure that carbonated water, food particles, beverages, etc. do not enter the potable water supply. These devices direct potentially polluted water out of the piping system through the vent.

ASSE 1022: Used on carbonated beverage machines

An ASSE 1022 device, example shown at the top right, is required on carbonated beverage machines. Food Code section 5-203.14 also stipulates that a 100-mesh screen must be installed on the upstream side of the ASSE 1022 device when installed on a water line to a carbonator. This protects the device from particles in the water supply. The 100-mesh screen may be located with the ASSE 1022 device, within the carbonator pump, or as an attachment such as shown in the picture above (the black "Y" is the added screen for this ASSE 1022).

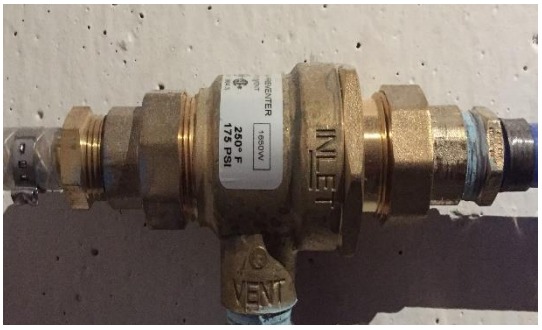

ASSE 1012: Used in place of ASSE 1022 devices except for carbonated beverage machines

An ASSE 1012 device, example show at bottom right, functions like an ASSE 1022 except it cannot be used for carbonated beverage machines.

.

Installation and Use:

- These units can be installed horizontally and vertically and must not be in a pit or a location subject to standing water. Under no circumstances can the relief port be plugged.
- These devices can be under constant pressure and may have shut off valves located upstream and downstream of the unit.
- If the relief port is piped to a drain, the piping must be air gapped at the drain.
- **These units are *approved* for low hazard only, continuous pressure, backpressure and backsiphonage.**

Reduced Pressure Zone Backflow Prevention Assembly (RPZ)
ASSE 1013 (high or low hazard)
This type of mechanical device provides the maximum protection against both backsiphonage and backpressure.

Installation and use:

- Under no circumstances should the relief port be plugged.
- The unit must be accessible for testing and service.
- This device can be under constant pressure and may have shut off valves located upstream and downstream of the unit.
- It can be installed lower than the potential source of contamination. Refer to the manufacturer's installation instructions.
- If the relief port is piped to a drain, the piping must be air gapped at the drain.
- ***Approved* for high and low hazards, continuous pressure, backpressure and backsiphonage.**

Anti-siphon-type Water Closet Flush Tank Ballcock: ASSE 1002 (low hazard)
Installation and Use: A ballcock assembly must be installed above the overflow pipe high water level. This prevents the water in the tank from being siphoned into the water supply lines.

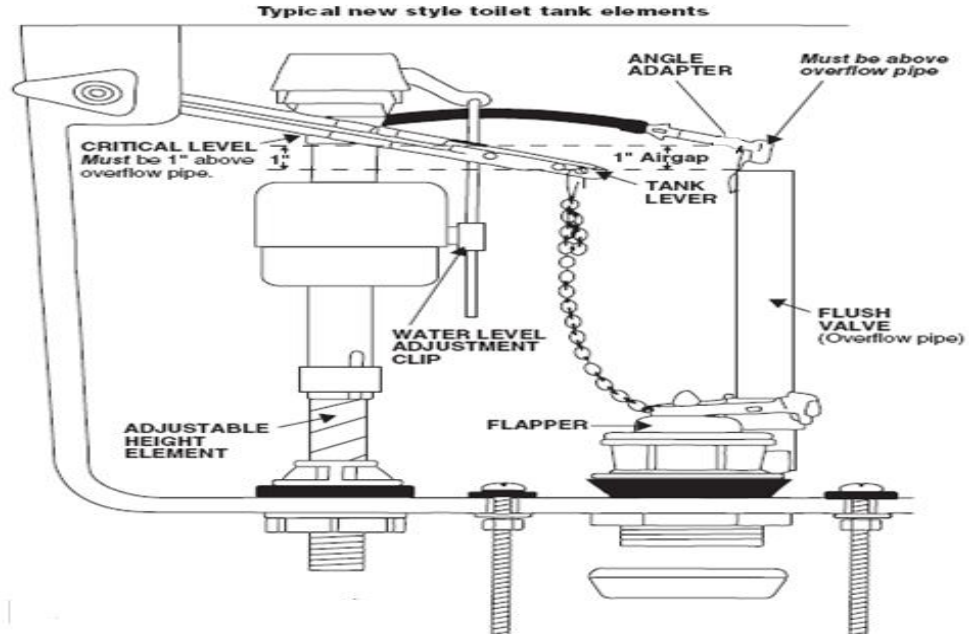

Backflow Prevention on Equipment Drain Line/Waste Pipe

When *equipment* has a drain line/waste pipe, the end of that drainline/waste pipe must connect to the facility's drainage or *sewage* system by a direct or indirect wastewater connection. The type of connection depends on the usage of the *equipment*.

Direct wastewater connection: A drain line or pipe from a fixture, receptacle, or device that discharges wastewater, waste materials, or *sewage* directly into the facility's drainage system.

Direct Connection

Indirect wastewater connection: A drain line or pipe from a fixture, receptacle, or device that discharges wastewater, waste materials, or *sewage* into the facilities drainage system through an "air gap" or "air break".

- **Air gap:** is the unobstructed vertical space that separates the end of a drainline/waste pipe and the flood rim of a receptacle.
- **Air break:** is a drain line/waste pipe from a fixture that discharges used water or liquid waste into another fixture or receptacle at a point below the flood rim level of the receptacle or fixture.

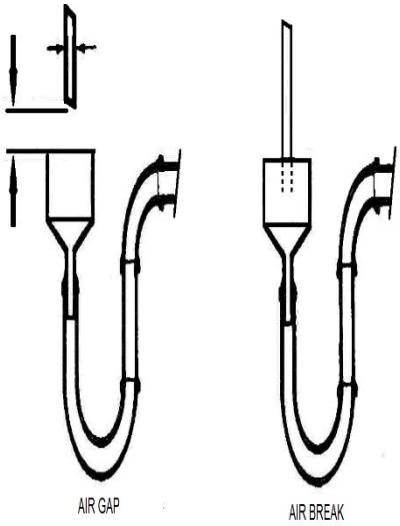

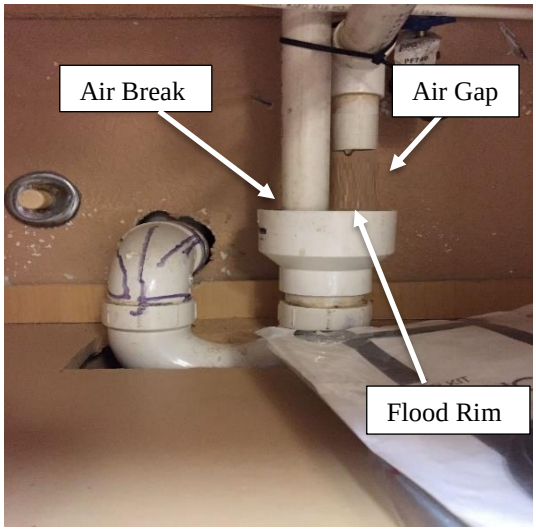

Michigan Modified Food Code states a **direct connection** may not exist between the sewage system and a drain originating from equipment in which food, portable equipment, or utensils are placed. Exceptions, within Michigan Modified Food Code, to this are:

- Floor drains that originate in refrigerated spaces that are constructed as an integral part of the building;
- If allowed by law* (e.g. Michigan Plumbing Code), a warewashing machine may have a direct connection between its waste outlet and a floor drain when the machine is located within 5 feet of a trapped floor drain and the machine outlet is connected to the inlet side of a properly vented floor drain trap.
- If allowed by law* (e.g. Michigan Plumbing Code), a warewashing or culinary sink may have a direct connection.

*Contact your local plumbing regulatory authority regarding requirements of Michigan Plumbing Code.

Michigan Food Law requires the **waste line from ice storage bins and ice machines** not be directly connected with another waste line and **shall be drained through an air gap**.

IMPORTANT: THIS GUIDANCE DOCUMENT ONLY OUTLINES REQUIREMENTS OF THE MICHIGAN MODIFIED FOOD CODE AND FOOD LAW AND DOES NOT ACCOUNT FOR REQUIREMENTS OF THE MICHIGAN PLUMBING CODE OR OTHER PLUMBING REGULATIONS PERTAINING TO CROSS-CONNECTION CONTROL. ANY SPECIFIC QUESTIONS PERTAINING TO MICHIGAN PLUMBING CODE OR OTHER CROSS-CONNECTION CONTROL REGULATIONS SHOULD BE DIRECTED TO THE REGULATORY AUTHORITY RESPONSIBLE FOR THESE REGULATIONS.

Part 13
Insect & Rodent Control

Worksheet Help			
Question #		Food Code & Food Law*	Guidance
33-35	Insect & Rodent Control	FC 6-202.13 FC 6-202.15	See information below.
*FC =Michigan Modified Food Code. *FL = Food Law. To view the food code, food law and other fact sheets go to: http://www.michigan.gov/mdard/0,4610,7-125-50772_45851_61711---,00.html or call 800-292-3939 to request single free copies.			

All openings to the outside shall be effectively protected against the entrance of insects and rodents. All roller doors, sliding or bifold doors, or similar movable wall systems that are not self-closing and create a continuous opening to the exterior must have an effective means of pest control. See Part 18 of this manual regarding additional information.

Some examples of effective barriers include:

- Solid, tight fitting, self-closing doors.
- Fixed or self-closing screens of #16 mesh or finer.
- Effective air curtains.

Air Curtain

This may not apply if a *food establishment* opens into a larger completely enclosed structure such as a coliseum, arena, warehouse, shopping mall, superstore, airport, or office building, where the outer openings from the larger structure are protected against the entry of insects and rodents.

Building

All masonry or cement foundations must be rodent proof. Seal all openings into the foundation and exterior walls, including openings & penetrations around wall and ceiling penetrations.

Cover all building vents with a minimum #16 mesh screen. Effectively seal all air ducts, skylights, transoms, and other openings to the outside.

Windows

Windows that open to the outside must be closed and tight-fitting. If windows are to be kept open for ventilation or other purposes, they need to be protected with 16 mesh or finer screens. Drive-thru and walk-up service windows must have effective means to prevent pest entry. This may include methods such as being self-closing (spring-loaded, bump pad, electronic opener, or gravity operated) or providing properly designed and installed air curtains.

Delivery, Customer, and Toilet Room Doors

- **Exterior doors**: All outside doors shall be self-closing and tight fitting. Install a door sweep and weather stripping to prevent the entrance of insects and rodents. **Note:** It is recommended that daylight should not be visible around the perimeter of the door.
- **Garage Doors, Roller Doors, and Loading Docks:** Garage and roller type delivery doors must be protected against pests. Loading docks shall have properly installed tight fitting dock seals at all loading bays. If the location of one of these doors exposes the kitchen or other food service, air curtains may be required.
- **Toilet Room (Restroom) doors:** All toilet rooms located in or adjacent to a *food establishment* shall be provided with tight fitting, self-closing doors. This requirement does not apply to a toilet room that is located outside a *food establishment* and does not open directly into the *food establishment* such as a toilet room that is provided by the management of a shopping mall.

Insect Control Devices, Design and Installation

Insect control devices that are used to electrocute or stun flying insects shall be designed to retain the insect within the device. These devices may not be located above food preparation areas and shall be installed to prevent the contamination of exposed food, clean *equipment*, utensils, and linens from insect fragments.

Part 14
Lighting

The light intensity shall be at least 108 lux (10-foot candles) at a distance of 75 cm (30 inches) above the floor, in walk-in refrigeration units, dry food storage areas and in other areas during periods of cleaning.

The light intensity shall be at least 215 lux (20-foot candles) at a surface where food is provided for consumer self-service such as buffets and salad bars or where product or packaged foods are sold or offered for consumption; inside *equipment* such as reach-in and under-counter refrigerators; at a distance of 75 cm (30 inches) above the floor in areas used for handwashing, *warewashing*, and *equipment* and utensil storage, and in toilet rooms.

The light intensity shall be at least 540 lux (50-foot candles) at a surface where a *food employee* is working with food or working with utensils or *equipment* such as knives, slicers, grinders, or saws where employees' safety is a factor.

Darker colored walls and floors may require additional lighting.

Shielding such as plastic shields, plastic sleeves with end caps, shatterproof bulbs and/or other a*pproved* devices shall be provided for all artificial lighting fixtures located in areas where there is exposed food; clean *equipment*, utensils, and *linens*; or unwrapped single-service and single-use articles.

Heat lamps, where permitted, shall be protected against breakage by a shield surrounding and extending beyond the bulb, leaving only the face of the bulb exposed.

Part 15
Ventilation

Worksheet Help			
Question #		**Food Code & Food Law***	**Guidance**
76	Ventilation	FC 4-204.11 FC 4-301.14 FC 6-202.12 FC 6-304.11 FC 6-501.14	List what *equipment* will be underneath a ventilation hood and if the hood is Type I, Type II, or ventless. A copy of the *equipment* ventilation plans submitted to the mechanical authority to obtain a mechanical permit should also be submitted to the reviewing regulatory agency.
*FC =Michigan Modified Food Code. *FL = Food Law. To view the food code, food law and other fact sheets go to: http://www.michigan.gov/mdard/0,4610,7-125-50772_45851_61711---,00.html or call 800-292-3939 to request single free copies.			

Michigan Mechanical Code
All rooms shall have sufficient ventilation to keep them free of excessive heat, steam, condensation, vapors, obnoxious odors, smoke and fumes. Ventilation systems in Michigan must be installed according to the provisions of the Michigan Mechanical Code. The Michigan Mechanical code adopted by reference the International Mechanical Code and NFPA-96, a standard of the National Fire Protection Association. Michigan has one mechanical code that is used statewide. Mechanical plans must be submitted to the regulatory agency conducting your review and to the local mechanical authority in the area where the facility is being built. The mechanical authority will issue any required permits. The mechanical code may be purchased from Michigan Department of Labor and Economic Growth, Bureau of Construction Codes at http://www.michigan.gov/lara/0,4601,7-154-10575_17394_17566---,00.html

The mechanical code does not regulate the following types of *food establishment* ventilation systems:

- Ductless cooking units
- The venting of any *equipment* considered portable

Since the local mechanical authority will not be involved in issuing permits for these ventilation systems, you should work directly with your reviewing regulatory agency on any necessary approvals.

Determining What *Equipment* Must be Vented
Work with the local mechanical authority in determining if a piece of *equipment* must be placed under a ventilation hood.

Air Balance Report and Smoke Test
Submission of an air balance schedule is recommended. Ask your reviewing regulatory agency if they need this information for your project. An air balance schedule typically shows an adequate volume of air exhausted from each ventilation exhaust hood and an equal volume of heated make-up air being introduced to replace the air being exhausted. The reviewing regulatory agency, at its discretion, may request submission of an air balance report and may conduct a smoke test of all exhaust hoods prior to authorizing the facility to operate. The air balance report and the smoke capture test are used to assure that the ventilation systems capture properly.

Mechanical Ventilation Hood Systems
Type I hoods are used over *equipment* that produce grease, smoke, excessive steam, heat, condensation, particulate matter, odors, or create indoor sanitation or indoor air quality problems. Examples of typical *equipment* installed under a Type I hood include: kettles, pasta cookers, hot plates, salamanders, fryers, Mongolian-style grills, gas cooking *equipment*, tableside cooking *equipment*, such as Teppanyaki-style cooking, Tandoori ovens, rotisserie units, etc.
Work with your local mechanical authority on what food *equipment* requires a Type I hood.

Type I Hood over Cookline

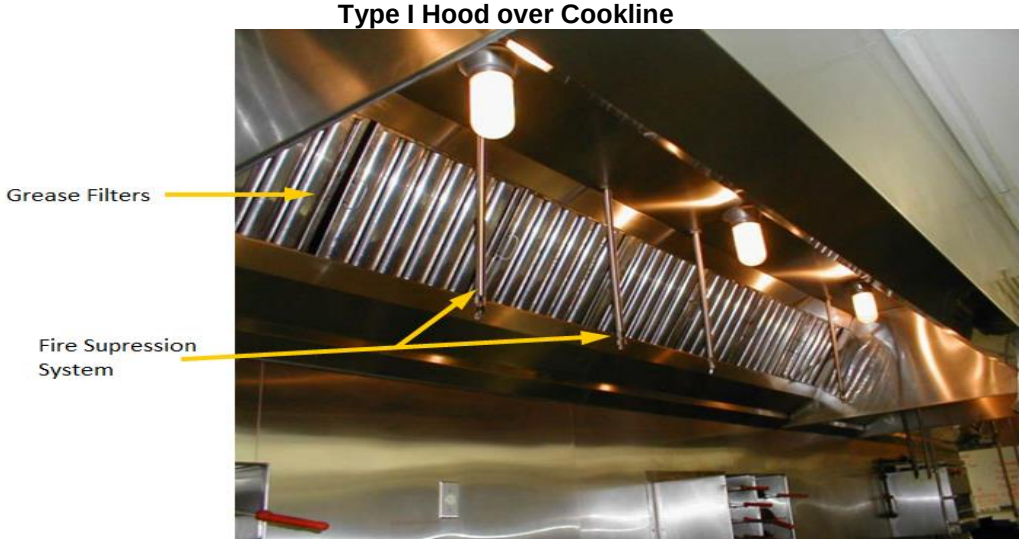

The National Fire Protection Association provides a resource for *food establishment*s to reduce the potential fire hazard of commercial cooking operations. Refer to the NFPA link below or your local/State Fire Protection regulations.

http://www.nfpa.org/codes-and-standards

Type II hoods are used over *equipment* that produce steam, heat, mists, condensation, fumes, vapors, and non-grease laden foods. **Work with your local mechanical authority on what food *equipment* requires a Type II hood.**

Type II Hood over *Warewashing* Machine

Ventless Cooking Systems are cooking *equipment* that have a built-in ventilation system. This type of cooking *equipment* should be reviewed and *approved* by the local mechanical authority, and other applicable fire safety code authority, regarding ventilation.

Part 16
Dressing & Lockers Rooms

Worksheet Help			
Question #		**Food Code & Food Law***	**Guidance**
13	Dressing Rooms	FC 6-305.11	Dressing rooms or dressing areas shall be designated if employees routinely change their clothes in the establishment. Lockers or other suitable facilities shall be provided for the orderly storage of employees' clothing and other possessions. Areas designated for employee personal items shall be located where contamination of food, *equipment*, utensils, linens, and single-service items cannot occur.
*FC =Michigan Modified Food Code. *FL = Food Law. To view the food code, food law and other fact sheets go to: http://www.michigan.gov/mdard/0,4610,7-125-50772_45851_61711---,00.html or call 800-292-3939 to request single free copies.			

Part 17
Garbage & *Refuse* Storage

Worksheet Help			
Question #		**Food Code & Food Law***	**Guidance**
36	Outside Storage	FC 5-5 FC 6-202.110	Garbage and *refuse* containers, dumpsters and compactor systems located outside shall be stored on or above a *smooth, durable* surface made of, or constructed of nonabsorbent material such as *sealed* concrete or asphalt. Outdoor *refuse* areas shall be constructed in accordance with law and shall be curbed and graded to drain to collect and dispose of liquid waste resulting from the *refuse* and from cleaning the area and waste receptacles. Garbage and *refuse* containers must have tight-fitting lids or covers.
37	Inside Storage	FC 5-5	Garbage or *refuse* storage rooms shall be constructed of cleanable, non-absorbent, washable materials and shall be insect-proof and rodent-proof. If rolling carts are to be used for collection of garbage or *refuse*, it is advisable to provide a designated storage area for these carts to prevent contamination of food or food *equipment*.
*FC =Michigan Modified Food Code. *FL = Food Law. To view the food code, food law and other fact sheets go to: http://www.michigan.gov/mdard/0,4610,7-125-50772_45851_61711---,00.html or call 800-292-3939 to request single free copies.			

Part 18
Open Dining, Exposed Food Preparation Areas & Outdoor Cooking Operations

Outdoor dining, kitchens or food preparation areas exposed to outside environment or cooking directly outdoors present unique challenges depending on what is being proposed. These operations can be operated safely when they follow well-defined regulatory standards that are established to control and minimize the contributing factors of foodborne disease.

The minimum guidelines set forth in this section are consistent with Michigan Modified Food Code.

Worksheet Help			
Question #		**Food Code & Food Law**	**Guidance**
77	Outdoor Dining/ Exposed Food Preparation Areas	FC 3-305.11, FC 3-305.14 FC 3-306.11, FC 3-307.11 FC 4-601.11, FC 4-903.11 FC 4-904.11, FC 4-904.13 FC 6-202.15, FC 6-202.16 FC 6-501.111	See information below.
78	Outdoor Cooking Operations	FC 2-103.11, FC 3-305.12 FC 3-305.14, FC 3-305.15 FC 3-306.11, FC 3-306.12 FC 3-307.11, FC Chapter 4 FC 5-203.11, FC 5-501.13 FC 5-501.15, FC 6-101.11 FC 6-201.11, FC 6-202.11 FC 6-202.16, FC 6-303.11 FC 6-304.11	See information below.
*FC =Michigan Modified Food Code. *FL = Food Law. To view the food code, food law and other fact sheets go to: http://www.michigan.gov/mdard/0,4610,7-125-50772_45851_61711---,00.html or call 800-292-3939 to request single free copies.			

Incidental Exposure to the Outdoors

Appropriate barriers and procedures need to be put into place to protect food, utensils, and food *equipment* from contamination and prevent pest entry if a dining area and/or food/beverage service area will be exposed to the outdoor environment. This exposure to the outdoors is typically through dining areas that have doors (i.e. sliding, garage), walls, or windows that can open or be moved to expose the *food establishment* and kitchen operations to the outdoors especially if an open kitchen concept will be used. Examples of appropriate barriers and procedures include but are not limited to:

- Solid tight fitting self-closing doors between the outdoor exposed dining area and kitchen and/or food preparation areas.
- Installation of screens on the outer openings of the dining area.
- Installation of air curtains on the outer openings of the dining area and/or between the openings of the kitchen/food preparation areas and the outdoor exposed dining area. To be effective, installed air curtains should be equal to or larger than the size of the opening they are installed over.
- Providing appropriate protective *equipment* or covers for exposed food and utensils.

- Conducting pre-service food preparation activities at times in which the establishment is not opened up to the outdoors.
- Limiting the types of food preparation/service that occur within the outdoor exposed area.
- Providing continued protection of the food preparation/service area within the outdoor exposed area when not in operation.

The types of barriers and procedures that will be needed depend upon your specific food operations and processes. A conversation will need to occur between you and the regulatory agency to determine the most effective means for protecting food, utensils and food *equipment*.

Outdoor Cooking/Preparation
When planning to cook foods outdoors as part of your fixed *food establishment*, several issues must be addressed to adequately protect food, utensils, and food *equipment*. **Outdoor cooking/preparation operations are not intended to be a standalone process but may be used in conjunction with the interior operations of your fixed *food establishment*.**

- Location of the outdoor cooking/preparation operation
  - Outdoor cooking/preparation must be in an area that is near an entrance to the kitchen that allows convenient and easy access to the support services provided by the interior operations of the *food establishment*. Safe and protected transportation of food, *equipment*, utensils, and other items from the interior of the *food establishment* to the outdoor area and back needs to be evaluated.
  - The outdoor cooking/preparation operation needs to be in an area that is protected from exterior *refuse* containers and *sewage* and rainwater runoff. Additionally, the area should have maintenance of vegetation in the surrounding area and effective pest control measures.

- Overhead Protection
  - Cooking and preparation *equipment* must be adequately covered (cooker top, lids, etc.). Additional overhead protection may also be required dependent upon proposed operations. Examples of acceptable overhead protection are roofs or other permanent structures, canopies, awnings, or table-type umbrellas that have met all state and local fire codes. Protection of individual pieces of food *equipment* and/or containers may still be necessary even if a canopy or other protective structure is provided.

- Walls
  - Walls may not be required at the outdoor area if only cooking takes place. However, if a specific environmental condition exists, walls may be needed to provide additional food protection. In certain locations, walls could be required to protect against the elements, windblown dust and

debris, insects, or other sources that may contaminate food, food contact surfaces, *equipment*, utensils, or employees. Screening, canvas, or other similar material may be *approved* by the *regulatory authority* if it provides adequate protection.
    - If tables or other food contact surfaces are used when cutting, slicing, washing, portioning, or otherwise preparing food items, then walls would be required to provide additional food protection.

- Floors
    - The floor surfaces of outdoor cooking/preparation areas shall be *smooth*, *easily cleanable* and of durable construction. The floor may need to be non-absorbent depending on what operations are occurring and will need to be discussed with your regulating agency.

- *Equipment*
    - Construction, maintenance, and cleaning of all *equipment* shall be in accordance with Chapter 4 of the Food Code and with the manufacturer's instructions. Hot and cold holding *equipment*, cooking facilities, preparation surfaces, and dispensing *equipment* must be appropriate for the types and quantities of food items being prepared and served at the outdoor cooking/preparation area. It is recommended that advance preparation or complex food assembly be conducted in the interior kitchen of facility.

      Equipment may be portable or permanently secured in place. *Equipment* used at the outdoor cooking/preparation area must be capable of cooking and maintaining foods at proper temperatures. A continuous, consistent heat source such as that from gas or electric cooking *equipment* is preferred over wood or charcoal. The local fire safety authority must approve all outdoor cooking devices.

- Handwashing Facilities
    - Handwashing facilities may be temporary or permanent based upon what food operations are occurring at the outdoor cooking/preparation area. Discussion needs to be had with the regulating agency regarding the most appropriate type of handwashing set up.

- *Warewashing* Facilities
    - It is recommended that all *warewashing* be conducted in the interior kitchen and that additional clean utensils be provided at the outdoor cooking/preparation area.

- Ventilation and Fire Protection
    - An enclosed cooking area can result in an excessive amount of heat, steam, condensation, vapors, obnoxious odors, smoke, and/or fumes to accumulate within the outdoor cooking/preparation area. Thus, mechanical ventilation may be needed in this area. Work with your local ventilation and fire protection regulators regarding possible needed mechanical ventilation and fire protection.

- Lighting
  - Adequate lighting by artificial or natural means is required at the outdoor cooking/preparation area during all hours of operation.
  - The artificial lighting fixtures provided over food handling locations shall be properly shielded.
  - Refer to Part 14 of this manual.

- Garbage
  - An adequate number of non-absorbent, *easily cleanable* garbage containers should be provided at the outdoor cooking/preparation area.
  - Garbage containers must be covered when not in use and shall be insect and rodent proof.
  - Grease must be disposed of properly and shall not be dumped onto the ground surface or into the sanitary sewer system.

- Food Defense
  - The outdoor cooking/preparation area must be secured to prevent unauthorized access to food, *equipment*, utensils, and related items. This includes protection of items used as cooking *equipment* fuel (wood, charcoal, propane tanks).

Part 19
Non-Smoking Area and Anti-Choking Poster Requirements

Effective May 1, 2010, smoking is prohibited in most public places in Michigan through the Ron Davis Smoke Free Law. The law covers any place of employment or *food service establishment* and a no-smoking sign is required to be posted. "Place of employment" means an enclosed indoor area that contains 1 or more work areas for 1 or more persons employed by a public or private employer. A "*food service establishment*" means a *food service establishment* as defined in the Michigan Food Law of 2000, as amended.

For further information or questions visit: http://www.michigan.gov/mdhhs/0,5885,7-339-71550_2955_2973_55026---,00.html, or call 800-292-3939.

Anti-choking Poster
Section 6141 of the Food Law, states that:

(1) A *food service establishment* in which solid foods are sold and consumed on the *premises* shall prominently display a poster in the kitchen area of the *food service establishment* diagramming and explaining the anti-choking techniques safe for both adults and children *approved* by the department for dislodging foreign obstacles caught in the throat of a choking person.
(2) This section does not impose a duty upon the owners or employees of a *food service establishment* to apply anti-choking techniques.

References

The following is a list of reference materials that users of the Plan Review Manual may find useful to more fully understand the complexities of facility plan review. These references contain suggested formulas in addition to the ones included in the preceding plan review guide.

Baraban, Regina S. and Joseph F. Durocher, *Successful Restaurant Design*, New York, NY: Van Nostrand Reinhold.

Barnes, James D., *Manual of Recommended Practice for Ventilation in Food Service Establishments*, National Environmental Health Association.

Birchfield, John C., *Design and Layout of Foodservice Facilities*, New York, NY: Van Nostrand Reinhold, 1984.

Food and Drug Administration, *Food Code 2009*, National Technical Information Service, Springfield, VA.

Kazarian, Edward A., *Foodservice Facilities Planning*, Third Edition, Copyright Van Nostrand Reinhold, New York, 1989.

NAFEM, National Association of Food *Equipment* Manufacturers, *Introduction to the Foodservice Industry* (Kitchen Design).

North American Association of Food *Equipment* Manufacturers, *An Introduction to the Foodservice Industry*, First Edition, 1996.

Slavato, J.A., *Environmental Engineering & Sanitation*, Fourth Edition, Copyright John Wiley & Sons, Inc., United States and Canada, 1992.

Scrieven, Carl and James Stevens, *Food Equipment Facts*, Troy, NY: Conceptual Design, 1980 or latest printing (or equal publication).

Stipanuk, David M. and Roffman, Harold, *Hospitality Facilities Management and Design*, American Hotel and Motel Association, Educational Institute, 1992.

Acknowledgements

This document is a modification of the FDA Plan Review Guidebook and Conference for Food Protection (CFP) 2016 *Food Establishment* Plan Review Manual.

The original FDA Plan Review Guidebook prepared by**:**
The Northeast Region Plan Review Development Committee for the Conference for Food Protection.

FDA Plan Review Guidebook:
https://www.fda.gov/food/guidanceregulation/retailfoodprotection/industryandregulatoryassistanceandtrainingresources/ucm101639.htm

CFP's 2016 *Food Establishment* Plan Review Manual:
http://www.foodprotect.org/guides-documents/plan-review-for-food-establishments-2016/

Revisions to MDARD *Food Establishment* Plan Review Manual completed in 2018 by:

Local Public Health:

- Allegan County Health Department, Rebecca Long
- Health Department of Northwest Michigan, Brandon Morrill
- Kalamazoo County Health Department, Chris Kujawa
- Livingston County Health Department, Amy Aumock & Brad Zulewski
- Macomb County Health Department, Lucy Brown & G. Michelle Ingram
- Oakland County Health Department, Sara Burch & Josh Nelson
- Washtenaw County Health Department, Alan Hauck
- Wayne County Health Department, Terry Linna

Industry:

- Meijer, Scott Gilliam
- NSF International, Derek DeLand

Michigan Department of Agriculture and Rural Development:

- Amanda Garvin
- Shane Green
- Jill Lozmack
- Susan Trombley